DOWNLOADED FROM WWW.SCATTS.CO.UK

IL EX ZONE 2

Inline terminals for use in zone 2 potentially explosive areas

Application note
7217_en_15

© PHOENIX CONTACT 2019-09-16

1 Description

This document provides information about Inline terminals that are approved for use in zone 2 potentially explosive areas.

WARNING: Explosion hazard when used in potentially explosive areas

When using Inline terminals in potentially explosive areas, observe the notes on page 4.

WARNING: Explosion hazard
Only use Inline terminals that are approved for use in potentially explosive areas!

Before using an Inline terminal in a zone 2 potentially explosive area, first check whether the terminal has been approved for installation in this area.

Check the labeling on the Inline terminal and on the packaging (see Figure 1 on page 5).

Table of contents

1 Description 1
2 Approved Inline terminals 2
3 Notes on using the Inline terminals in potentially explosive areas..... 4
4 Labeling of Inline terminals for use in potentially explosive areas..... 5

Make sure you always use the latest documentation.
It can be downloaded at phoenixcontact.net/products.

DOWNLOADED FROM WWW.SCATTS.CO.UK

DOWNLOADED FROM WWW.SCATTS.CO.UK

2 Approved Inline terminals

For terminals marked "Ⓔx approved only if printed accordingly" in the "Comment" column, please note:

Until the start of 2017, these terminals were approved for use in potentially explosive areas of zone 2 according to the ATEX directive and marked accordingly (Ⓔx). Do not plan to install these terminals in new systems.

Please observe the associated terminal-specific documentation if you

- are already using
- would like to use or
- would like to replace

a terminal of this type in a potentially explosive area.

Please also observe the information given in this application note.

Terminals without a corresponding marking (Ⓔx) are not approved for use in potentially explosive areas.

Order No.	Type	As of hardware version	Comment
Inline controller			
2700973	ILC 131 ETH	00	
2701034	ILC 131 ETH/XC	00	
2985330	ILC 150 ETH	04	
2988188	ILC 155 ETH	01	
2700974	ILC 151 ETH	00	
2701141	ILC 151 ETH/XC	00	
2700977	ILC 151 GSM/GPRS	03	
2700975	ILC 171 ETH 2TX	01	
2700976	ILC 191 ETH 2TX	03	
2700074	ILC 191 ME/AN	04	
Bus coupler			
2861580	IBS IL 24 BK-T/U-PAC	05	
2862000	IBS IL 24 BK-T/U-2MBD-PAC	01	**Ⓔx approved only if printed accordingly**
2861218	IBS IL 24 BK-LK-PAC	05	**Ⓔx approved only if printed accordingly**
2692322	IL PB BK DI8 DO4/EF-PAC	01	
2862327	FL IL 24 BK-B-PAC	11	**Ⓔx approved only if printed accordingly**
2878696	IL MOD BK DI8 DO4-PAC	01	
2703981	IL ETH BK DI8 DO4 2TX-PAC	02	
2703994	IL PN BK DI8 DO4 2TX-PAC	02	
2878379	IL PN BK DI8 DO4 2SCRJ-PAC	03	**Ⓔx approved only if printed accordingly**
2861205	IB IL 24 MUX MA-PAC	15	
2718413	IB IL 24 MUX MA	15	**Ⓔx approved only if printed accordingly**
Power terminals			
2861331	IB IL 24 PWR IN-PAC	09	
2726311	IB IL 24 PWR IN	09	**Ⓔx approved only if printed accordingly**
2862152	IB IL 24 PWR IN/2-F-D-PAC	01	

DOWNLOADED FROM WWW.SCATTS.CO.UK

DOWNLOADED FROM WWW.SCATTS.CO.UK

Order No.	Type	As of hardware version	Comment
Boost terminals			
2861674	IB IL 24 PWR IN/R-PAC	01	
2693020	IB IL 24 PWR IN/R/L-0.8A-PAC	00	
Digital I/O terminals			
2861234	IB IL 24 DI 4-PAC	04	
2861250	IB IL 24 DI 16-PAC	07	
2862835	IB IL 24 DI 32/HD-PAC	00	
2878243	IB IL 24 DI 32/HD-NPN-PAC	00	**approved only if printed accordingly**
2861263	IB IL 24 DO 2-2A-PAC	05	
2861700	IB IL 24 DO 2-2A-2MBD-PAC	02	**approved only if printed accordingly**
2819053	IB IL 24 DO 2-2A-2MBD	02	**approved only if printed accordingly**
2861276	IB IL 24 DO 4-PAC	06	
2861292	IB IL 24 DO 16-PAC	06	
2862961	IB IL 24 DO 16-PAC/SN	06	**approved only if printed accordingly**
2862822	IB IL 24 DO 32/HD-PAC	00	
2878340	IB IL 24 DO 32/HD-NPN-PAC	00	**approved only if printed accordingly**
Analog I/O terminals			
2861302	IB IL AI 2/SF-PAC	06	
2862149	IB IL AI 2-HART-PAC	00	
2861412	IB IL AI 8/SF-PAC	02	
2862042	IB IL AI 8/SF-2MBD-PAC	00	**approved only if printed accordingly**
2861315	IB IL AO 1/SF-PAC	10	
2861328	IB IL TEMP 2 RTD-PAC	05	
2861386	IB IL TEMP 2 UTH-PAC	09	**approved only if printed accordingly**
2897402	IB IL TEMP 4/8 RTD/EF-PAC	02	
2897606	IB IL TEMP 4/8 RTD/EF 2MBD-PAC	01	**approved only if printed accordingly**
2897509	IB IL TEMP 4/8 RTD/EF 2MBD	01	**approved only if printed accordingly**
2884907	IB IL SGI 2/P-PAC	01	**approved only if printed accordingly**
2700064	IB IL SGI 1/CAL	00	**approved only if printed accordingly**

DOWNLOADED FROM WWW.SCATTS.CO.UK

DOWNLOADED FROM WWW.SCATTS.CO.UK

3 Notes on using the Inline terminals in potentially explosive areas

WARNING: Explosion hazard

Please make sure that the following notes and instructions are observed!

Installation notes

1. The Inline terminals listed in section 2 are category 3 devices designed for installation in zone 2 potentially explosive areas.
   These devices meet the requirements of the EN 60079-0 and EN 60079-15 standards.
   For the version of the standard according to which the device has been approved please refer to the CE declaration of conformity. It can be downloaded at phoenixcontact.net/products.
2. The Inline terminal must only be installed, operated, and maintained by qualified personnel.
3. Please follow the installation instructions given in the IL SYS INST UM E user manual and the packing slip.
4. When installing and operating the device, the applicable safety directives (including national safety directives), accident prevention regulations, and general technical regulations must be observed.
5. Please refer to the corresponding documentation (user manual, data sheet, packing slip) and the certificates (declaration of conformity and other approvals, if applicable) for safety-related data.
6. Access to the circuits inside the Inline terminal is not permitted. Do not repair the Inline terminal yourself but replace it with a terminal of the same type.
   Repairs may be carried out by the manufacturer only. The manufacturer is not liable for damage resulting from non-compliance.
7. The IP20 (EN 60529) degree of protection for the device is designed for a clean and dry environment.
8. Do not subject the Inline terminal to mechanical strain and/or thermal loads, which exceed the limits specified in the product documentation.
9. The Inline terminal has not been designed for use in potentially dust-explosive atmospheres.

Installation in zone 2

1. Observe the specified conditions for use in potentially explosive areas!
2. Install the device in a suitable approved housing that meets the requirements of EN 60079-15 and has IP54 protection at minimum. Observe also the requirements of IEC 60079-14 / EN 60079-14.
3. The following work is permitted only when the power is disconnected:
   - Snapping the device onto the DIN rail
   - Removing the device from the DIN rail
   - Connection and disconnection of cables
4. Only devices that are designed for operation in Ex zone 2 and for the conditions at the specific installation location may be connected to the circuits in zone 2.
5. With bus couplers, controllers, and power terminals: Connect the DIN rail to protective earth ground.
6. With bus couplers having a D-SUB connection:
   For safe operation, the D-SUB connector must be screwed into the corresponding D-SUB socket. Repair any damaged connectors immediately.
7. With controllers having a plug-in parameterization memory (SD card):
   For safe operation with the plug-in parameterization memory (SD card), it must be completely plugged in and snapped into place.

Restrictions/limit values

1. Please observe the restrictions/limit values on the data sheet of the terminal used.
2. The maximum permissible current for each spring-cage contact is 2 A.
3. Please make sure that the **maximum permissible current of 4 A or 8 A** (for the actual value refer to the datasheet of the terminals in use) flowing through potential jumpers U_M and U_S (total current) is not exceeded when using the Inline terminals in potentially explosive areas.
4. Also ensure that the **maximum permissible current of 2 A or 0.8 A** (value according to terminal data sheet) flowing through potential jumper U_L is not exceeded!

DOWNLOADED FROM WWW.SCATTS.CO.UK

DOWNLOADED FROM WWW.SCATTS.CO.UK

4 Labeling of Inline terminals for use in potentially explosive areas

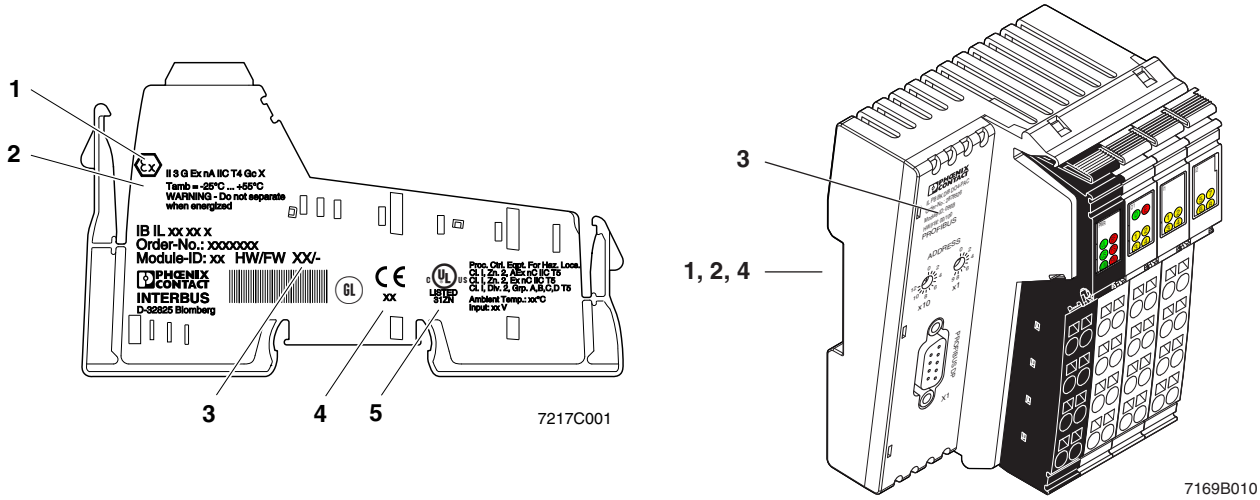

Snap-on Inline terminals

Bus coupler (here IL PB BK DI8 DO4-PAC)

Figure 1 Typical labeling of Inline terminals that are approved for use in zone 2 potentially explosive areas

Key:

1 Approval for use in potentially explosive areas *

2 Possible restrictions *

3 Hardware version

4 Year of manufacture *

5 Approvals for UL/CUL *

***** May also be printed on the bottom of the module (e.g. for the IL PB BK DI8 DO4-PAC bus coupler)

Make sure you always use the latest documentation.
It can be downloaded at phoenixcontact.net/products.

DOWNLOADED FROM WWW.SCATTS.CO.UK

SCATTERGOOD & JOHNSON LTD
ELECTRICAL ENGINEERING & FLUID CONTROL DISTRIBUTORS
Est.1899

At Scattergood & Johnson Ltd, we pride ourselves on being a technical distributor to specialist industries.

Working with a range of quality product suppliers across a number of specialist markets, we are not your average 'box shifter' - we are your technical and supply chain partner.

We fully support every product we sell - for free! Our internal team and external sales engineers can answer any product or application question, no matter the complexity.

Backing up this technical ability is a range of 50,000+ products available from stock for nationwide next day delivery (same day if required!), or you can collect what you need from any of our trade counters around the UK.

Select your specialist interest below to learn more about how we can help.

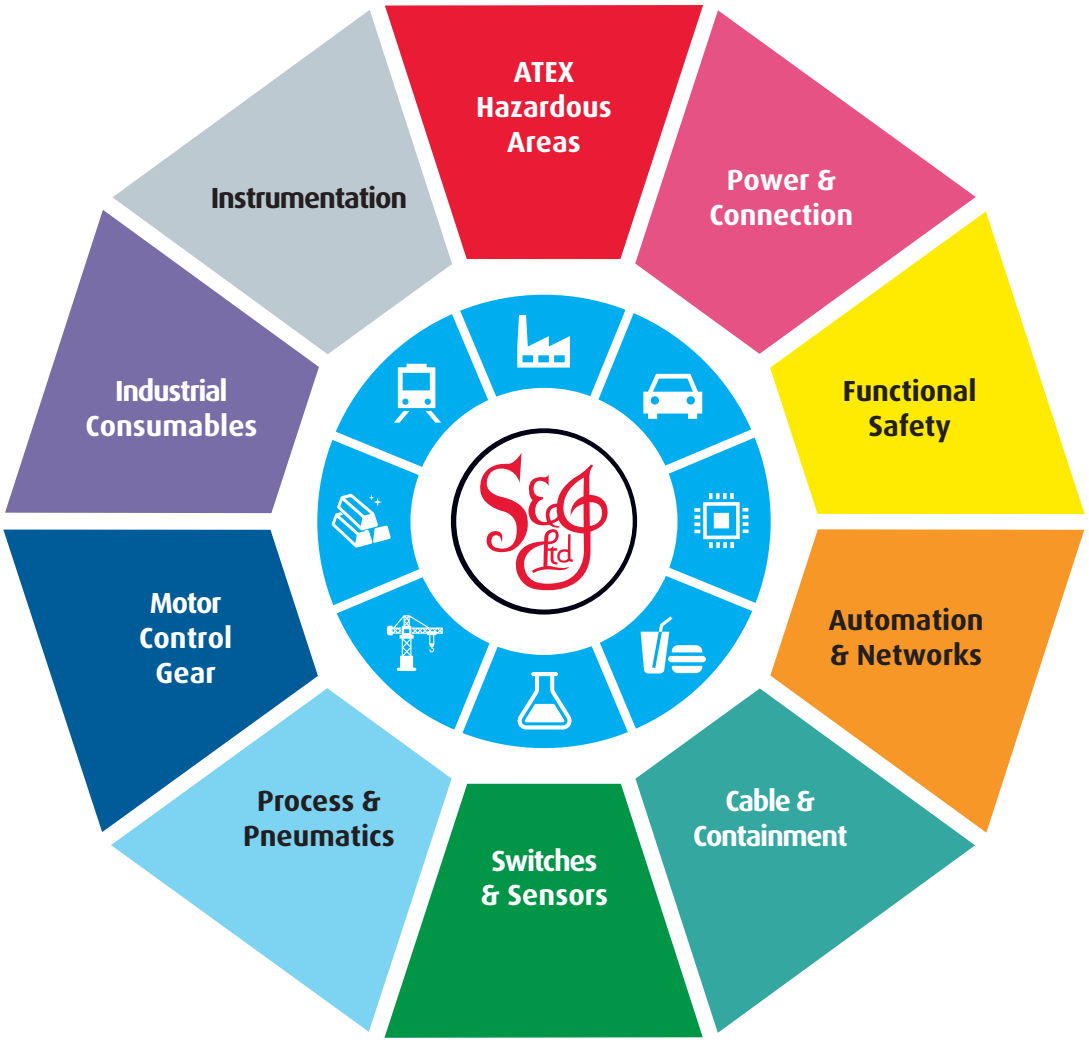

Online, In Branch and On the Road - Scattergood & Johnson Ltd, there when you need us.

www.scatts.co.uk