DOWNLOADED FROM WWW.SCATTS.CO.UK

Signal conditioner - MINI MCR-SL-UI-UI-SP-NC - 2864163

Please be informed that the data shown in this PDF Document is generated from our Online Catalog. Please find the complete data in the user's documentation. Our General Terms of Use for Downloads are valid
(http://phoenixcontact.com/download)

MCR 3-way signal conditioner, input/output can be configured via DIP switches, for the electrical isolation of analog signals, with spring-cage connection, standard configuration. Replacement part: 2902040 MINI MCR-2-UI-UI-PT.

Your advantages

- Power supply possible via the foot element (TBUS)
- Up to 36 signal combinations can be configured using DIP switches
- Low power consumption
- Highly-compact isolating amplifier for electrical isolation, conversion, amplification, and filtering of standard analog signals
- 3-way isolation

Key Commercial Data

Packing unit	1 pc
GTIN	4 017918 974794
GTIN	4017918974794
Weight per Piece (excluding packing)	64.400 g
Custom tariff number	85437090
Country of origin	Germany

Technical data

Dimensions

Width	6.2 mm
Height	93.1 mm
Depth	102.5 mm

DOWNLOADED FROM WWW.SCATTS.CO.UK

DOWNLOADED FROM WWW.SCATTS.CO.UK

Signal conditioner - MINI MCR-SL-UI-UI-SP-NC - 2864163

Technical data

Ambient conditions

Ambient temperature (operation)	-20 °C ... 65 °C
Ambient temperature (storage/transport)	-40 °C ... 85 °C
Degree of protection	IP20
Noise immunity	EN 61000-6-2 When being exposed to interference, there may be minimal deviations.

Input data

Number of inputs	1
Configurable/programmable	Yes, unconfigured
Voltage input signal	0 V ... 10 V
	0 V ... 5 V
	1 V ... 5 V
	2 V ... 10 V
Current input signal	0 mA ... 20 mA
	4 mA ... 20 mA
max. input voltage	30 V
Max. input current	50 mA
Input resistance of voltage input	approx. 100 kΩ
Input resistance current input	approx. 50 Ω

Output data

Number of outputs	1
Configurable/programmable	Yes, unconfigured
Voltage output signal	0 V ... 10 V
	0 V ... 5 V
	1 V ... 5 V
	2 V ... 10 V
Current output signal	0 mA ... 20 mA (please indicate if different setting when ordering)
	4 mA ... 20 mA
Max. output voltage	approx. 12.5 V
Max. output current	28 mA
Short-circuit current	approx. 22 mA
Load/output load voltage output	≥ 10 kΩ
Load/output load current output	< 500 Ω (at 20 mA)
Ripple	< 20 mV_{PP} (at 500 Ω)
	< 20 mV_{PP} (at 10 kΩ)

Power supply

Nominal supply voltage	24 V DC

DOWNLOADED FROM WWW.SCATTS.CO.UK

DOWNLOADED FROM WWW.SCATTS.CO.UK

Signal conditioner - MINI MCR-SL-UI-UI-SP-NC - 2864163

Technical data

Power supply

Supply voltage range	19.2 V DC ... 30 V DC (The DIN rail bus connector (ME 6,2 TBUS-2 1,5/5-ST-3,81 GN, Order No. 2869728) can be used to bridge the supply voltage. It can be snapped onto a 35 mm DIN rail according to EN 60715))
Max. current consumption	< 19 mA (Current output, at 24 V DC incl. load)
	< 9 mA (Voltage output, at 24 V DC incl. load)
Power consumption	< 450 mW (Current output)
	< 200 mW (Voltage output)

Connection data

Connection method	Spring-cage connection
Stripping length	8 mm
Conductor cross section solid	0.2 mm² ... 2.5 mm²
Conductor cross section flexible	0.2 mm² ... 2.5 mm²
Conductor cross section AWG	24 ... 12

General

No. of channels	1
Maximum transmission error	≤ 0.1 % (of final value)
	< 0.4 % (Without adjustment)
Maximum temperature coefficient	< 0.01 %/K
Temperature coefficient, typical	< 0.002 %/K
Limit frequency (3 dB)	approx. 100 Hz
Step response (10-90%)	approx. 3.2 ms
Protective circuit	Transient protection
Electrical isolation	Basic insulation according to EN 61010
Overvoltage category	II
Degree of pollution	2
Rated insulation voltage	50 V AC/DC
Test voltage, input/output/supply	1.5 kV (50 Hz, 1 min.)
Electromagnetic compatibility	Conformance with EMC directive
Noise emission	EN 61000-6-4
Noise immunity	EN 61000-6-2 When being exposed to interference, there may be minimal deviations.
Color	green
Housing material	PBT
Mounting position	any
Assembly instructions	The T connector can be used to bridge the supply voltage. It can be snapped onto a 35 mm DIN rail according to EN 60715.
Conformance	CE-compliant
ATEX	# II 3 G Ex nA IIC T4 Gc X

DOWNLOADED FROM WWW.SCATTS.CO.UK

DOWNLOADED FROM WWW.SCATTS.CO.UK

Signal conditioner - MINI MCR-SL-UI-UI-SP-NC - 2864163

Technical data

General

UL, USA/Canada	UL 508 Recognized
	Class I, Div. 2, Groups A, B, C, D T5
GL	GL EMC 2 D
Fire protection for rail vehicles (DIN EN 45545-2) R22	HL 1 - HL 2
Fire protection for rail vehicles (DIN EN 45545-2) R23	HL 1 - HL 2
Fire protection for rail vehicles (DIN EN 45545-2) R24	HL 1 - HL 2

EMC data

Designation	Electromagnetic RF field
Standards/regulations	EN 61000-4-3
Typical deviation from the measuring range final value	5 %
Designation	Fast transients (burst)
Standards/regulations	EN 61000-4-4
Typical deviation from the measuring range final value	5 %
Designation	Conducted interferences
Standards/regulations	EN 61000-4-6
Typical deviation from the measuring range final value	5 %

Standards and Regulations

Electromagnetic compatibility	Conformance with EMC directive
Noise emission	EN 61000-6-4
Connection in acc. with standard	CUL
Standards/regulations	EN 61000-4-2
Designation	Electromagnetic RF field
Standards/regulations	EN 61000-4-3
	EN 61000-4-4
	EN 61000-4-5
Designation	Conducted interferences
Standards/regulations	EN 61000-4-6
Electrical isolation	Basic insulation according to EN 61010
Conformance	CE-compliant
ATEX	# II 3 G Ex nA IIC T4 Gc X
UL, USA/Canada	UL 508 Recognized
	Class I, Div. 2, Groups A, B, C, D T5
GL	GL EMC 2 D
Fire protection for rail vehicles (DIN EN 45545-2) R22	HL 1 - HL 2
Fire protection for rail vehicles (DIN EN 45545-2) R23	HL 1 - HL 2
Fire protection for rail vehicles (DIN EN 45545-2) R24	HL 1 - HL 2

DOWNLOADED FROM WWW.SCATTS.CO.UK

DOWNLOADED FROM WWW.SCATTS.CO.UK

Signal conditioner - MINI MCR-SL-UI-UI-SP-NC - 2864163

Technical data

Environmental Product Compliance

China RoHS	Environmentally Friendly Use Period = 50
	For details about hazardous substances go to tab “Downloads”, Category “Manufacturer's declaration”

Drawings

Application drawing

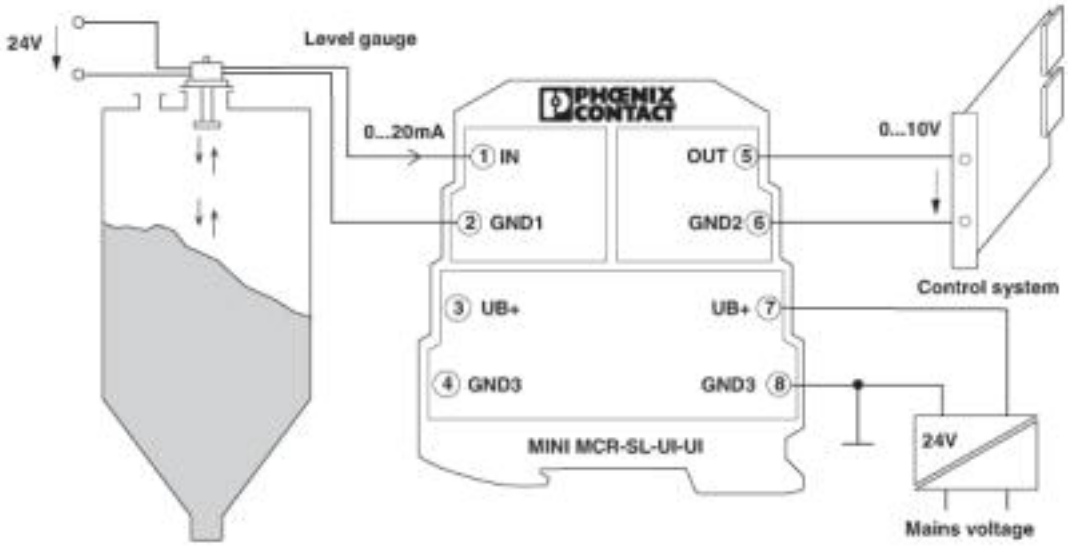

Level measurement

DOWNLOADED FROM WWW.SCATTS.CO.UK

DOWNLOADED FROM WWW.SCATTS.CO.UK

Signal conditioner - MINI MCR-SL-UI-UI-SP-NC - 2864163

Block diagram

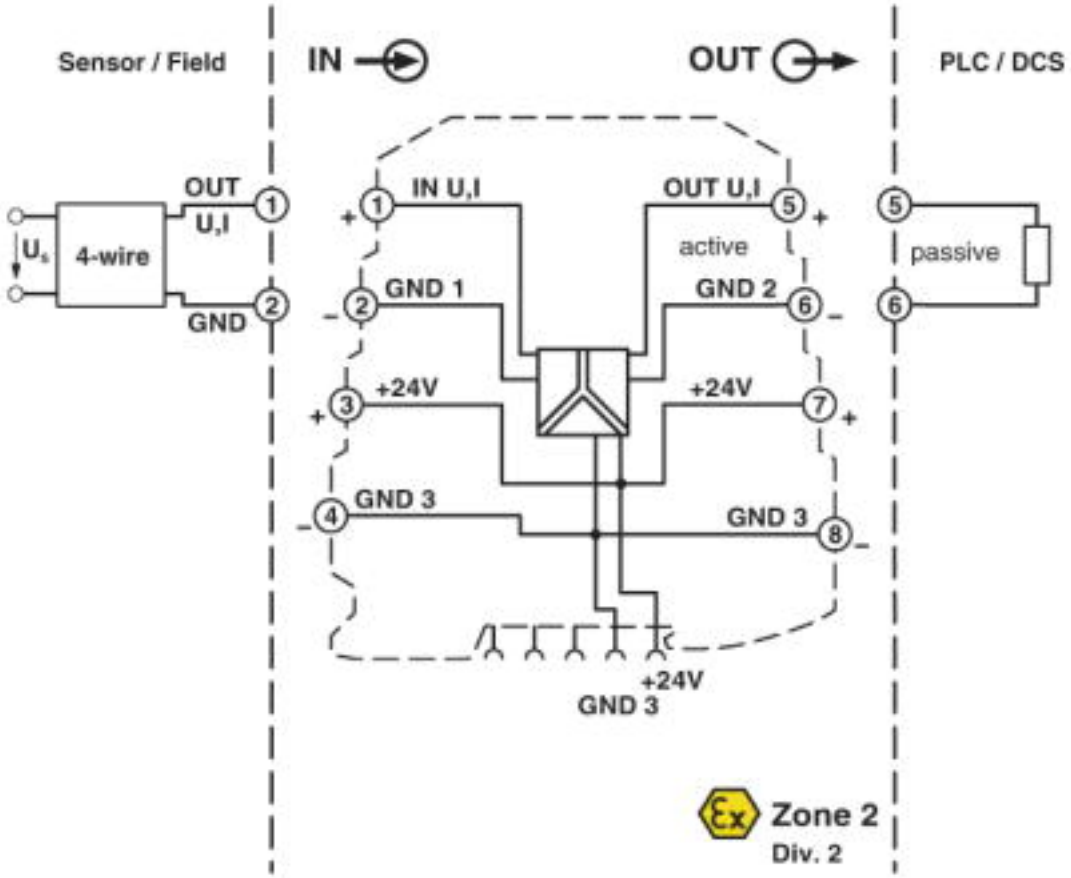

DOWNLOADED FROM WWW.SCATTS.CO.UK

DOWNLOADED FROM WWW.SCATTS.CO.UK

Signal conditioner - MINI MCR-SL-UI-UI-SP-NC - 2864163

Dimensional drawing

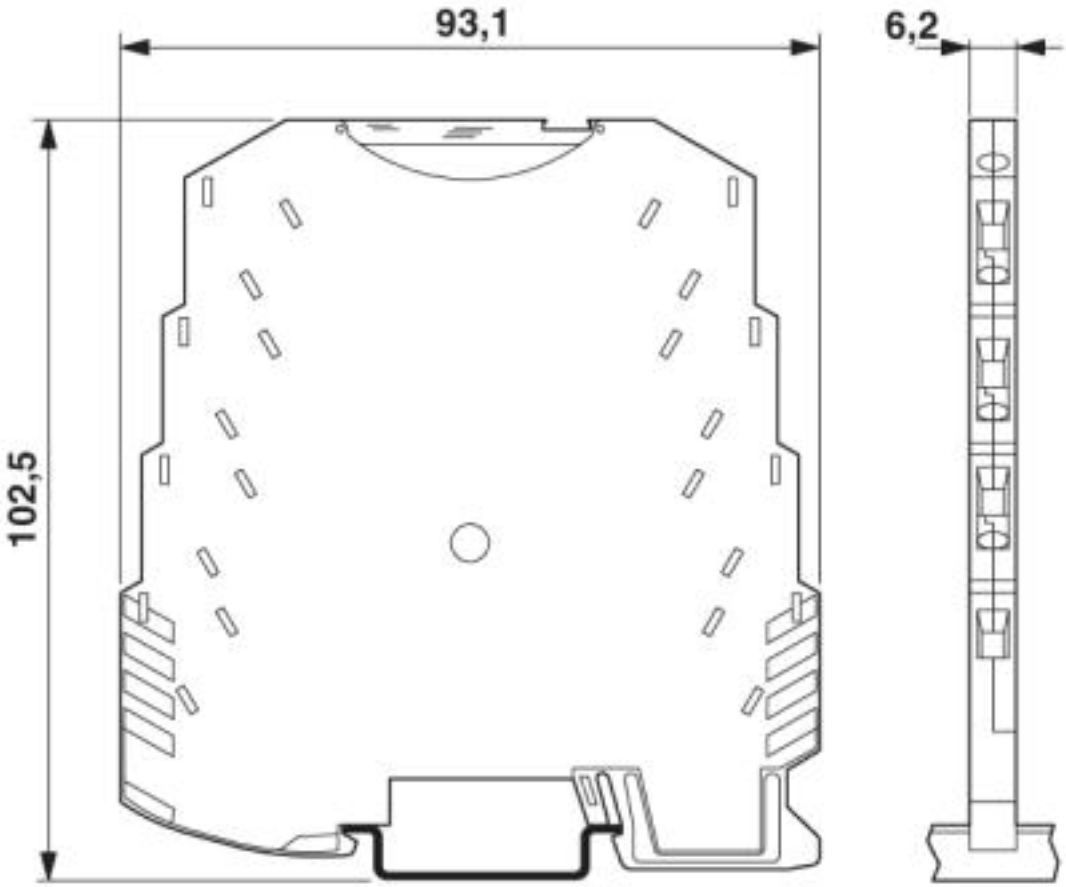

Classifications

eCl@ss

eCl@ss 4.0	27210100
eCl@ss 4.1	27210100
eCl@ss 5.0	27210100
eCl@ss 5.1	27210100
eCl@ss 6.0	27210100
eCl@ss 7.0	27210120
eCl@ss 8.0	27210120
eCl@ss 9.0	27210120

ETIM

ETIM 4.0	EC002653
ETIM 5.0	EC002653

DOWNLOADED FROM WWW.SCATTS.CO.UK

DOWNLOADED FROM WWW.SCATTS.CO.UK

Signal conditioner - MINI MCR-SL-UI-UI-SP-NC - 2864163

Classifications

ETIM

ETIM 6.0	EC002653
ETIM 7.0	EC002653

UNSPSC

UNSPSC 6.01	30211506
UNSPSC 7.0901	39121008
UNSPSC 11	39121008
UNSPSC 12.01	39121008
UNSPSC 13.2	39121008

Phoenix Contact 2019 © - all rights reserved
http://www.phoenixcontact.com

DOWNLOADED FROM WWW.SCATTS.CO.UK

SCATTERGOOD & JOHNSON LTD
ELECTRICAL ENGINEERING & FLUID CONTROL DISTRIBUTORS
Est.1899

At Scattergood & Johnson Ltd, we pride ourselves on being a technical distributor to specialist industries.

Working with a range of quality product suppliers across a number of specialist markets, we are not your average 'box shifter' - we are your technical and supply chain partner.

We fully support every product we sell - for free! Our internal team and external sales engineers can answer any product or application question, no matter the complexity.

Backing up this technical ability is a range of 50,000+ products available from stock for nationwide next day delivery (same day if required!), or you can collect what you need from any of our trade counters around the UK.

Select your specialist interest below to learn more about how we can help.

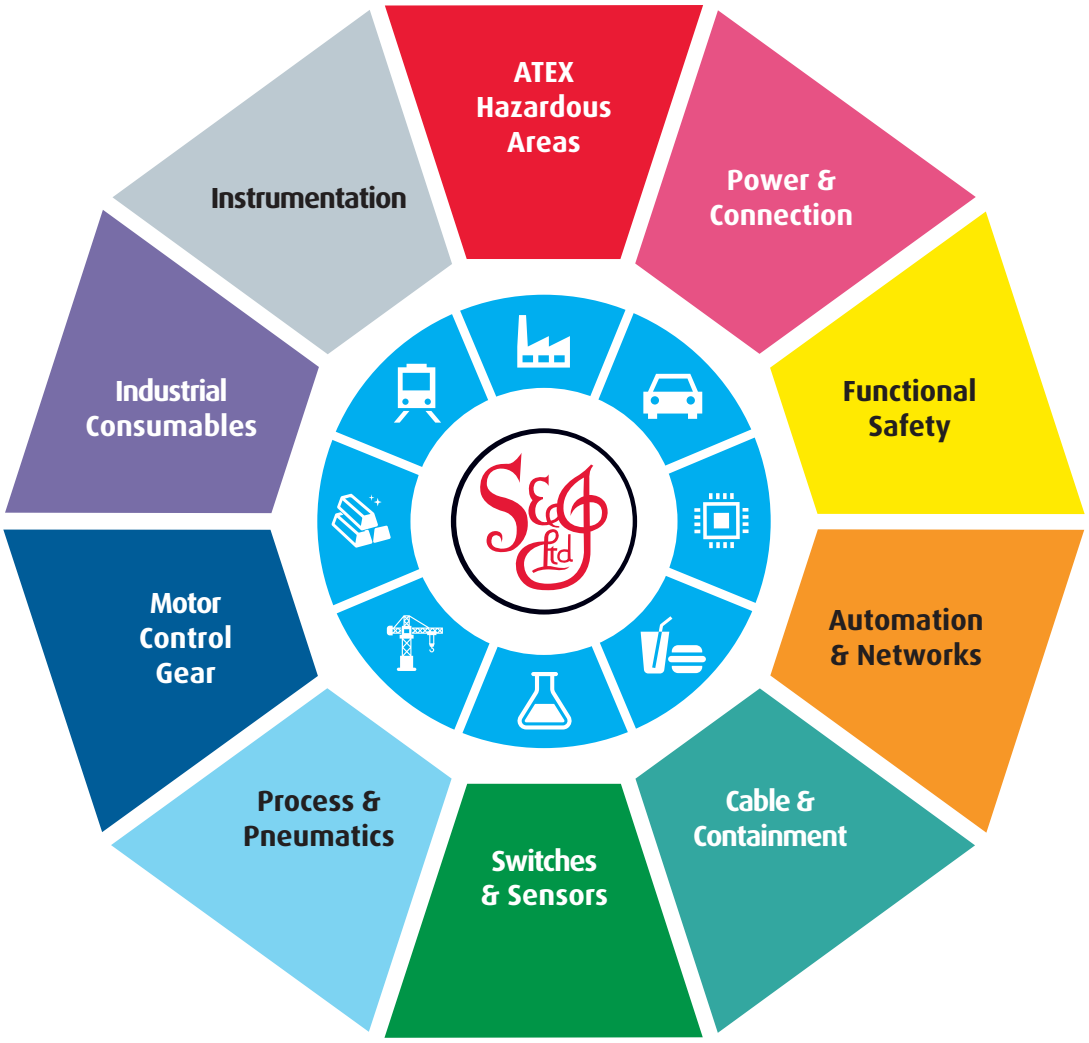

Online, In Branch and On the Road - Scattergood & Johnson Ltd, there when you need us.

www.scatts.co.uk