DOWNLOADED FROM WWW.SCATTS.CO.UK

Signal duplicator - MINI MCR-SL-UI-2I-NC - 2864176

Please be informed that the data shown in this PDF Document is generated from our Online Catalog. Please find the complete data in the user's documentation. Our General Terms of Use for Downloads are valid
(http://phoenixcontact.com/download)

4-way signal duplicator for electrical isolation and duplication of analog signals with screw connection, standard configuration

Product Description

The 6.2 mm wide configurable 4-way isolating amplifier MINI MCR-SL-UI-2I-... is used for electrical isolation, conversion, amplification and filtering of standard signals.
On the input side, the analog standard signals 0...20 mA, 4...20 mA, 0...10 V or 1...5V can be selected, on the output side there are two current outputs that can be set independently of one another with a 0...20 mA-, or 4...20mA signal, electrically isolated (4-way isolation).
The DIP switches, which can be accessed on the side of the housing, can be used to configure the input and output signal ranges.
Power (19.2 V DC to 30 V DC) can be supplied through connection terminal blocks on the modules or in conjunction with the DIN rail connector.

Your advantages

- Power supply possible via the foot element (TBUS)
- Highly-compact isolating amplifier for electrical isolation, conversion, amplification, filtering, and duplication of standard analog signals
- Up to 8 signal combinations can be configured using DIP switches
- 4-way isolation
- Duplication of a standard analog signal on two current outputs

Key Commercial Data

Packing unit	1 pc
GTIN	4 017918 974800
GTIN	4017918974800
Weight per Piece (excluding packing)	95.000 g
Custom tariff number	85437090
Country of origin	Germany

DOWNLOADED FROM WWW.SCATTS.CO.UK

DOWNLOADED FROM WWW.SCATTS.CO.UK

Signal duplicator - MINI MCR-SL-UI-2I-NC - 2864176

Technical data

Note

Utilization restriction	EMC: class A product, see manufacturer's declaration in the download area

Dimensions

Width	6.2 mm
Height	93.1 mm
Depth	101.2 mm

Ambient conditions

Ambient temperature (operation)	-20 °C ... 60 °C
Ambient temperature (storage/transport)	-40 °C ... 85 °C
Permissible humidity (operation)	10 % ... 95 % (non-condensing)
Degree of protection	IP20
Noise immunity	EN 61000-6-2 When being exposed to interference, there may be minimal deviations.

Input data

Number of inputs	1
Configurable/programmable	Yes, unconfigured
Voltage input signal	0 V ... 10 V (please indicate if different setting when ordering)
	1 V ... 5 V
Current input signal	0 mA ... 20 mA
	4 mA ... 20 mA
max. input voltage	30 V
Max. input current	50 mA
Input resistance of voltage input	approx. 100 kΩ
Input resistance current input	approx. 50 Ω

Output data

Number of outputs	2
Configurable/programmable	Yes, unconfigured
Current output signal	2x 0 mA ... 20 mA
	2x 4 mA ... 20 mA
Max. output current	approx. 22 mA
Load/output load current output	≤ 250 Ω (at 20 mA)
Ripple	< 20 mV_{PP} (at 250 Ω)

Power supply

Nominal supply voltage	24 V DC

DOWNLOADED FROM WWW.SCATTS.CO.UK

DOWNLOADED FROM WWW.SCATTS.CO.UK

Signal duplicator - MINI MCR-SL-UI-2I-NC - 2864176

Technical data

Power supply

Supply voltage range	19.2 V DC ... 30 V DC (The DIN rail bus connector (ME 6,2 TBUS-2 1,5/5-ST-3,81 GN, Order No. 2869728) can be used to bridge the supply voltage. It can be snapped onto a 35 mm DIN rail according to EN 60715))
Max. current consumption	< 30 mA (at 24 V DC incl. load)
Power consumption	< 600 mW

Connection data

Connection method	Screw connection
Stripping length	12 mm
Screw thread	M3
Conductor cross section solid	0.2 mm² ... 2.5 mm²
Conductor cross section flexible	0.2 mm² ... 2.5 mm²
Conductor cross section AWG	26 ... 12

General

No. of channels	2
Maximum transmission error	≤ 0.2 % (of final value)
Transmission error, typical	< 0.1 %
Maximum temperature coefficient	< 0.01 %/K
Temperature coefficient, typical	< 0.004 %/K
Limit frequency (3 dB)	approx. 35 Hz
Protective circuit	Transient protection
Electrical isolation	Basic insulation according to EN 61010
Overvoltage category	II
Degree of pollution	2
Rated insulation voltage	50 V AC/DC
Test voltage, input/output/supply	1.5 kV (50 Hz, 1 min.)
Electromagnetic compatibility	Conformance with EMC directive
Noise emission	EN 61000-6-4
Noise immunity	EN 61000-6-2 When being exposed to interference, there may be minimal deviations.
Color	green
Housing material	PBT
Mounting position	any
Assembly instructions	The T connector can be used to bridge the supply voltage. It can be snapped onto a 35 mm DIN rail according to EN 60715.
Conformance	CE-compliant
ATEX	# II 3 G Ex nA IIC T4 Gc X
UL, USA/Canada	UL 508 Recognized
	Class I, Div. 2, Groups A, B, C, D T5

DOWNLOADED FROM WWW.SCATTS.CO.UK

DOWNLOADED FROM WWW.SCATTS.CO.UK

Signal duplicator - MINI MCR-SL-UI-2I-NC - 2864176

Technical data

General

GL	GL EMC 2 D
Fire protection for rail vehicles (DIN EN 45545-2) R22	HL 1 - HL 2
Fire protection for rail vehicles (DIN EN 45545-2) R23	HL 1 - HL 2
Fire protection for rail vehicles (DIN EN 45545-2) R24	HL 1 - HL 2

EMC data

Designation	Electromagnetic RF field
Standards/regulations	EN 61000-4-3
Typical deviation from the measuring range final value	5 %
Designation	Fast transients (burst)
Standards/regulations	EN 61000-4-4
Typical deviation from the measuring range final value	5 %
Designation	Conducted interferences
Standards/regulations	EN 61000-4-6
Typical deviation from the measuring range final value	5 %

Standards and Regulations

Electromagnetic compatibility	Conformance with EMC directive
Noise emission	EN 61000-6-4
Connection in acc. with standard	CUL
Standards/regulations	EN 61000-4-2
Designation	Electromagnetic RF field
Standards/regulations	EN 61000-4-3
	EN 61000-4-4
	EN 61000-4-5
Designation	Conducted interferences
Standards/regulations	EN 61000-4-6
Electrical isolation	Basic insulation according to EN 61010
Conformance	CE-compliant
ATEX	# II 3 G Ex nA IIC T4 Gc X
UL, USA/Canada	UL 508 Recognized
	Class I, Div. 2, Groups A, B, C, D T5
GL	GL EMC 2 D
Fire protection for rail vehicles (DIN EN 45545-2) R22	HL 1 - HL 2
Fire protection for rail vehicles (DIN EN 45545-2) R23	HL 1 - HL 2
Fire protection for rail vehicles (DIN EN 45545-2) R24	HL 1 - HL 2

Environmental Product Compliance

China RoHS	Environmentally Friendly Use Period = 50

DOWNLOADED FROM WWW.SCATTS.CO.UK

DOWNLOADED FROM WWW.SCATTS.CO.UK

Signal duplicator - MINI MCR-SL-UI-2I-NC - 2864176

Technical data

Environmental Product Compliance

	For details about hazardous substances go to tab “Downloads”, Category “Manufacturer's declaration”

Drawings

Block diagram

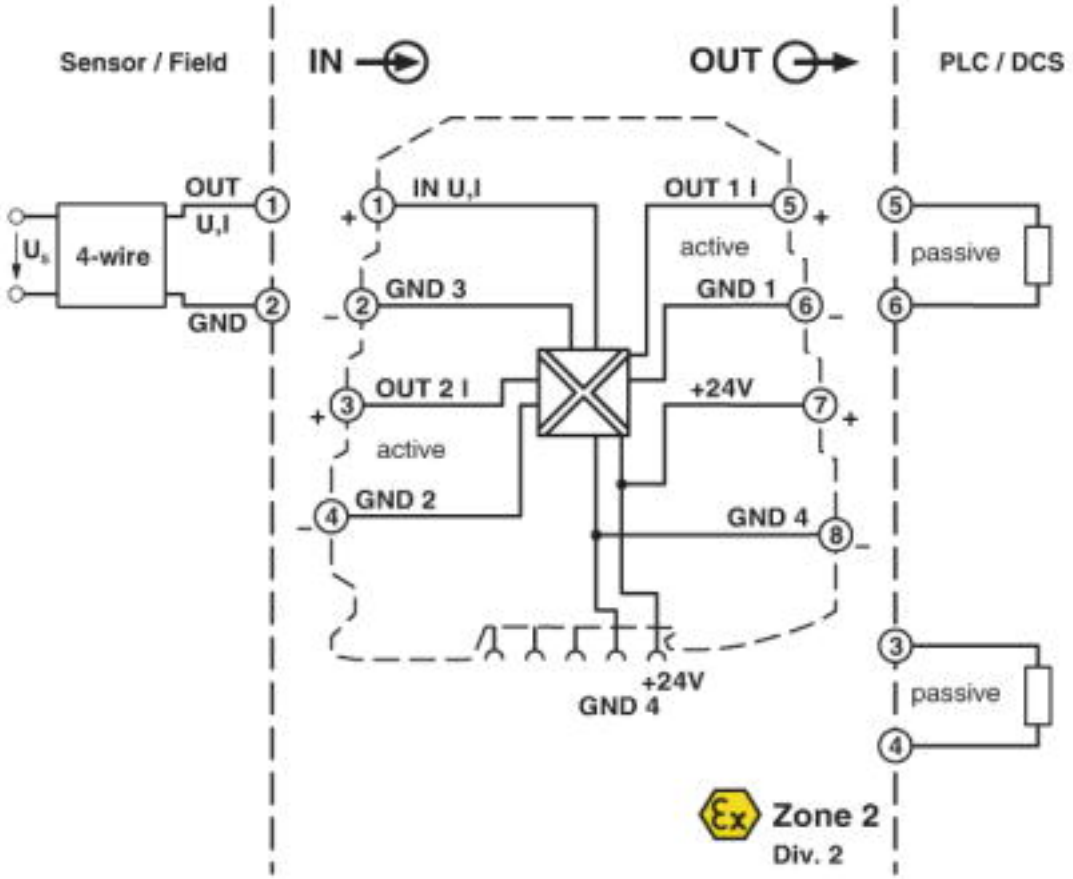

DOWNLOADED FROM WWW.SCATTS.CO.UK

DOWNLOADED FROM WWW.SCATTS.CO.UK

Signal duplicator - MINI MCR-SL-UI-2I-NC - 2864176

Dimensional drawing

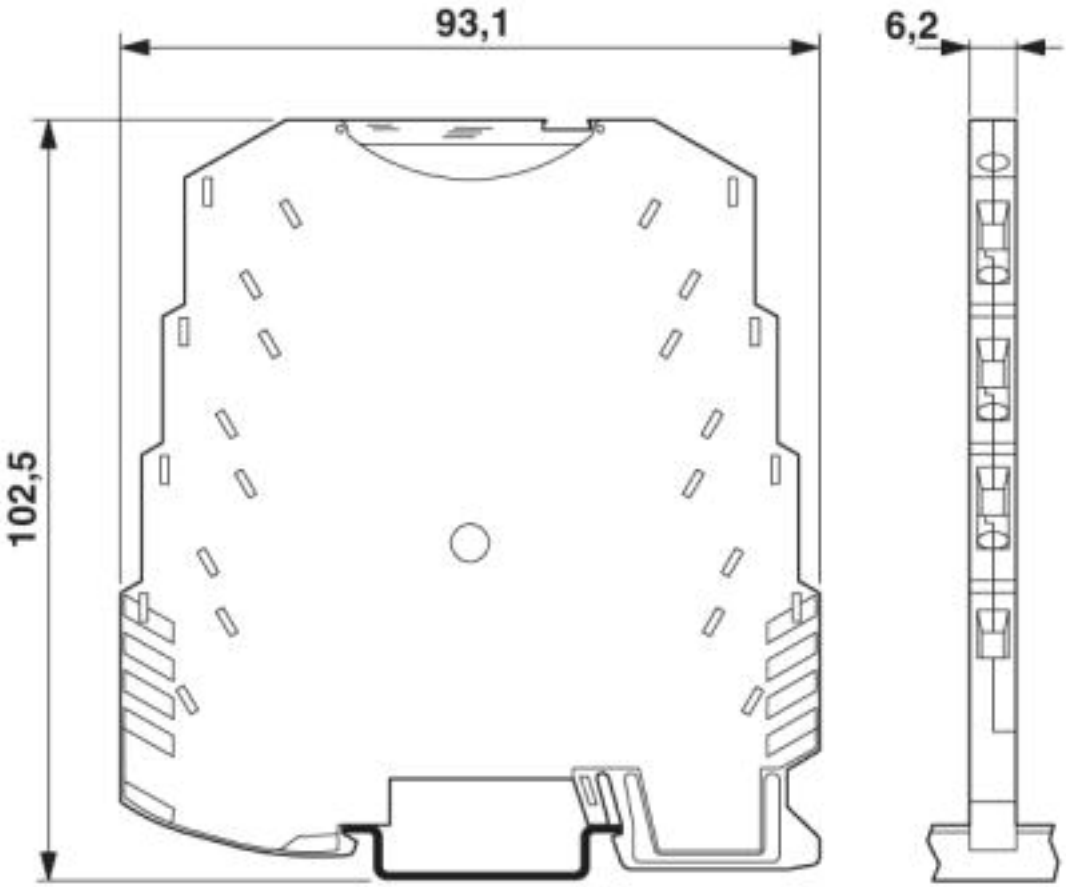

Classifications

eCl@ss

eCl@ss 4.0	27210100
eCl@ss 4.1	27210100
eCl@ss 5.0	27210100
eCl@ss 5.1	27210100
eCl@ss 6.0	27210100
eCl@ss 7.0	27210120
eCl@ss 8.0	27210120
eCl@ss 9.0	27210120

ETIM

ETIM 4.0	EC002653
ETIM 5.0	EC002653

DOWNLOADED FROM WWW.SCATTS.CO.UK

DOWNLOADED FROM WWW.SCATTS.CO.UK

Signal duplicator - MINI MCR-SL-UI-2I-NC - 2864176

Classifications

ETIM

ETIM 6.0	EC002653
ETIM 7.0	EC002653

UNSPSC

UNSPSC 6.01	30211506
UNSPSC 7.0901	39121008
UNSPSC 11	39121008
UNSPSC 12.01	39121008
UNSPSC 13.2	39121008

Approvals

Approvals

Approvals

GL / UL Recognized / cUL Recognized / cULus Recognized

Ex Approvals

ATEX / UL Listed / cUL Listed / EAC Ex / cULus Listed

Approval details

GL	GL	https://approvalfinder.dnvgl.com/	24917-05 HH
UL Recognized		http://database.ul.com/cgi-bin/XYV/template/LISEXT/1FRAME/index.htm	FILE E 238705
cUL Recognized	c	http://database.ul.com/cgi-bin/XYV/template/LISEXT/1FRAME/index.htm	FILE E 238705
cULus Recognized	c US		

DOWNLOADED FROM WWW.SCATTS.CO.UK

DOWNLOADED FROM WWW.SCATTS.CO.UK

Phoenix Contact 2019 © - all rights reserved
http://www.phoenixcontact.com

DOWNLOADED FROM WWW.SCATTS.CO.UK

SCATTERGOOD & JOHNSON LTD
ELECTRICAL ENGINEERING & FLUID CONTROL DISTRIBUTORS
Est.1899

At Scattergood & Johnson Ltd, we pride ourselves on being a technical distributor to specialist industries.

Working with a range of quality product suppliers across a number of specialist markets, we are not your average 'box shifter' - we are your technical and supply chain partner.

We fully support every product we sell - for free! Our internal team and external sales engineers can answer any product or application question, no matter the complexity.

Backing up this technical ability is a range of 50,000+ products available from stock for nationwide next day delivery (same day if required!), or you can collect what you need from any of our trade counters around the UK.

Select your specialist interest below to learn more about how we can help.

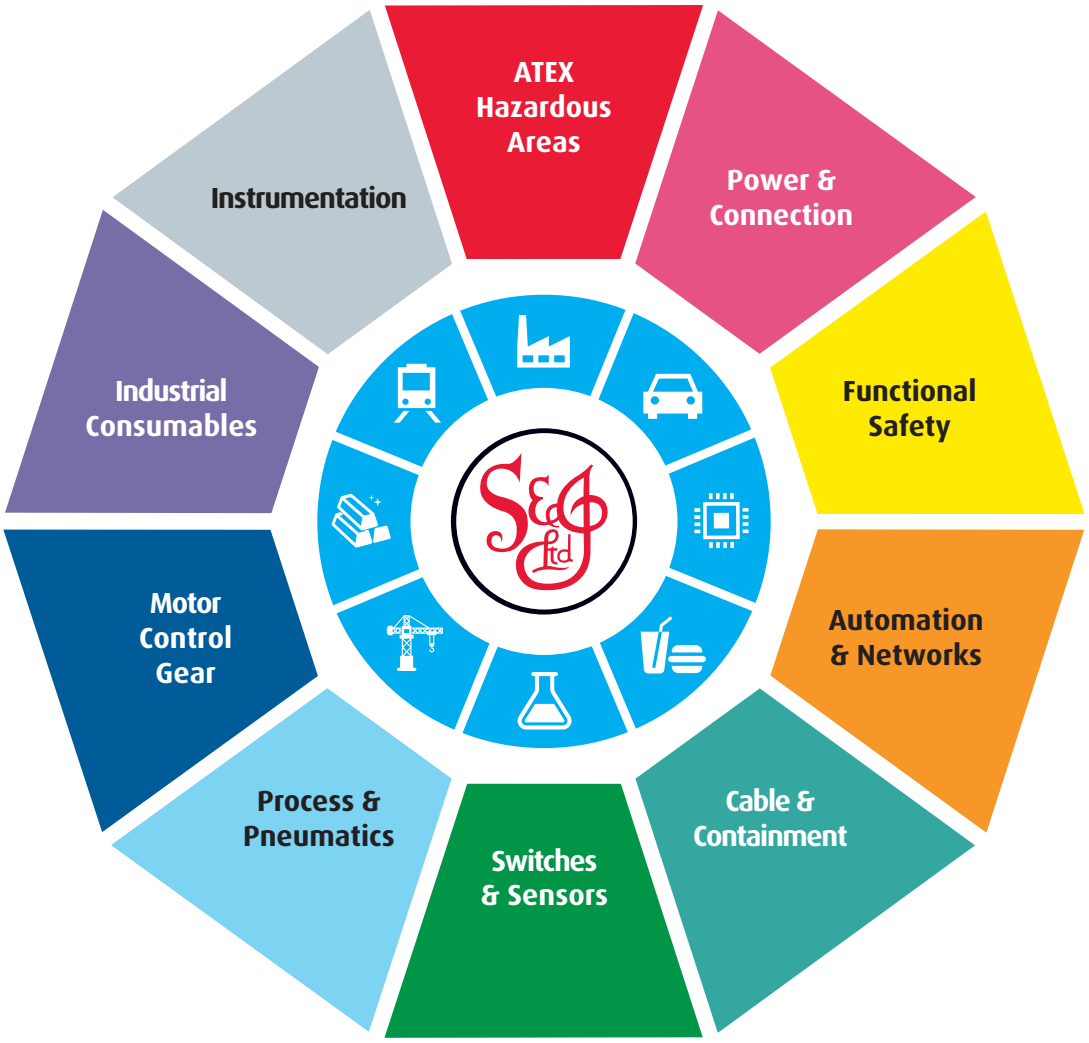

Online, In Branch and On the Road - Scattergood & Johnson Ltd, there when you need us.

www.scatts.co.uk