DOWNLOADED FROM WWW.SCATTS.CO.UK

MECHAN CONTROLS

Magnetic Safety Switches

Installation Instructions for Magnasafe - MS5, MS5-SS, MS7 & MS7-SS

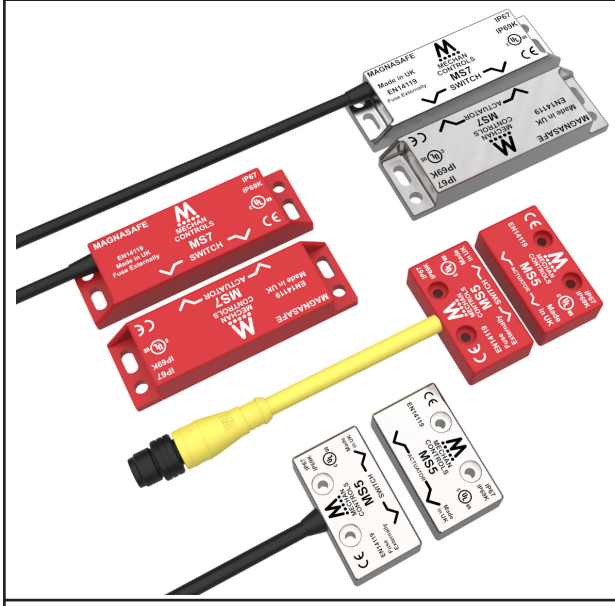

Description

MAGNASAFE MS5 and MS7 safety switches are non-contact, magnetically operated switch and actuator. Designed to work with safety relays that have a low inrush current on the switch input, these switches provides an economical method of switching for the higher category, dual channel circuits.

These safety switches are available in a robust ABS, or 316 Grade Stainless Steel housing, and both switch and actuator are fully sealed to IP67 & IP69K making them suitable for use in wet or dusty environments. They are easy to install and tolerant to misalignment. With correct installation, these safety switches comply with the guidelines given in EN14119.

Magnasafe safety switches are designed to be used in part of safety related control system. A risk assessment should take place to establish that the specifications of these safety switches are suitable for the application required. See Technical Specifications below or contact Mechan Controls for further information.

KEEP THIS GUIDE FOR FUTURE REFERENCE

The information is designed to help suitably qualified personnel install and operate Mechan Controls safety equipment. Before using this product, read this guide thoroughly along with any relevant European and/or National Standards E.g. Machinery Directive 2006/42/EC and its Amendments, Provision and Use of Work Equipment Regulations. Further information can be obtained from Mechan Controls Ltd.

Technical Specifications	MS5, MS5-SS	MS7, MS7-SS
Contacts	2 NO or 2 NO + 1 NC	1 NO + 1NC, 2 NO + 1 NC or 3 NO
Safety Contact Rating	24Vdc / 300mA	24Vdc / 300mA
Safety Contact Switching	7mm ON / 17mm OFF	7mm ON / 20mm OFF
Auxiliary Contact Rating	24Vdc / 300mA	24Vdc / 300mA
Auxiliary Contact Switching	7mm OFF / 17mm ON	7mm OFF / 14mm ON
Internal Fuse	-	-
External Fuse *(Customer Supplied)*	0.2 Amps Fast Acting	0.2 Amps Fast Acting
Construction	RED ABS, or 316 Grade Stainless Steel	RED ABS, or 316 Grade Stainless Steel
IP Rating	IP67 / IP69K	IP67 / IP69K
Operating Temperature	-25°C to +55°C (High Temp -25°C to +125°C)	-25°C to +55°C
Fixing	M4 Torx security screws (Tightening Torque 1.0NM)	M4 Torx security screws (Tightening Torque 1.0NM)
Connection	Pre-wired or M12 Quick Disconnect	Pre-wired or M12 Quick Disconnect
Vibration	10 - 50Hz IEC 68-2-6	10 - 50Hz IEC 68-2-6
Shock	10g, 11ms IEC 68-2-27	10g, 11ms IEC 68-2-27

Safety Related Data			
B10d	2,000,000	PFH	6.52×10^{-8}
TM (Mission Time)	> 20 Years	PFHd	4.3×10^{-8} See Note 1
DC	99%	SFF	98%
MTTFd	High > 100 Years (Based on usage rate of 360 Days/Year, 24 Hours/Day, 10 Operations/Hour)		

Note 1: Based on dual channel wiring according to CAT 4. Diagnostic coverage provided by downstream control logic. DC - medium, MTTFd = 100 Years. Suitable for performance level applications PLe according to ISO 13849-1. (SIL 3 or SIL 2 according to IEC 62061)

DOWNLOADED FROM WWW.SCATTS.CO.UK

DOWNLOADED FROM WWW.SCATTS.CO.UK

Safety Standards

Approvals	CE Complies with all relevant sections of the CE Marking Directive
	cUL 508 Industrial Control TUV Approved
International Directives	Machinery Directive 2006/42/EC, Low Voltage Directive 2006/95/EC; EMC Directive 2014/30/EU, RoHS Directive 2011/65/EC
International Standards	EN 12100 Safety of Machinery. General principles for design.
	EN ISO 14119 Safety of Machinery. Interlocking devices associated with guards. Principles for design and selection. EN ISO 13849 Safety of Machinery. Safety related parts of control systems.
	EN ISO 62061 Safety of Machinery. Functional safety of safety related electrical, electronic and programmable electronic control systems
	EN 60204 Safety of Machinery. Electrical equipment of machines.
	EN 60947-5-1 Low-voltage switchgear and controlgear.
	EN 60947-5-3 Low-voltage switchgear and controlgear.

Dimensions

MS5

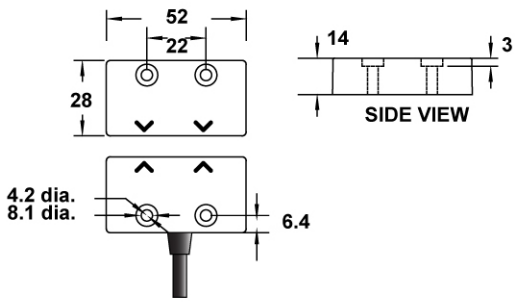

MS5-SS

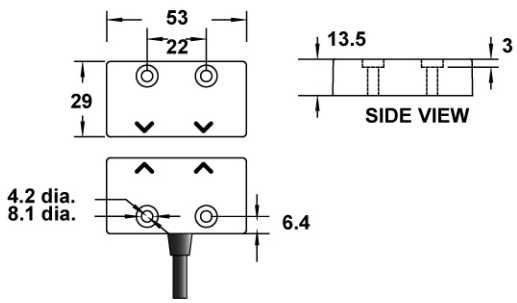

MS7

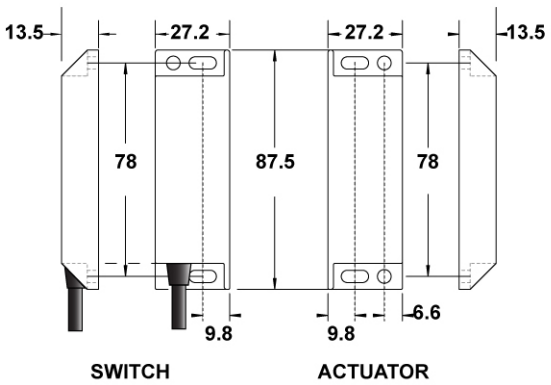

MS7-SS

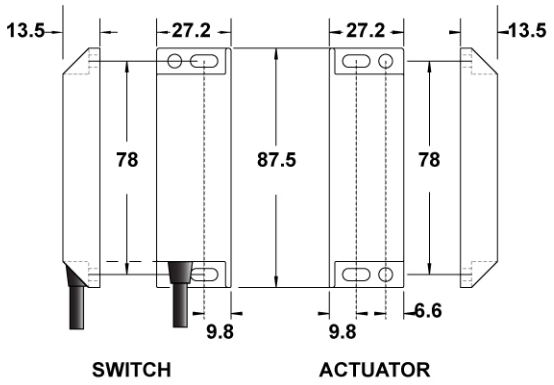

Mounting

Do not use safety switches as a stop. 1 mm separation when closed provides the best results.

Mount the switch on to the machine frame and the actuator on to the opening edge of the door.

Always try to mount the switch on non-ferrous material. (Ferrous materials may reduce the switching distance.)

EN14119: Hide the actuator where possible.

NOTES:

Minimum separation 50mm between adjacent switches

DO NOT mount on hinged side of the guard.

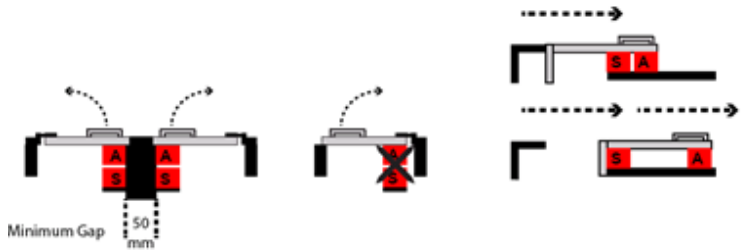

DOWNLOADED FROM WWW.SCATTS.CO.UK

DOWNLOADED FROM WWW.SCATTS.CO.UK

Connections & Fuses

PRE-WIRED

MS7-11

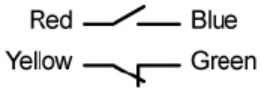

MS5-21 & MS5-SS-21
MS7-21 & MS7-SS-21

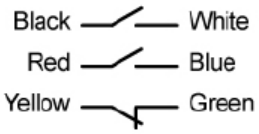

MS7-30
MS7-SS-30

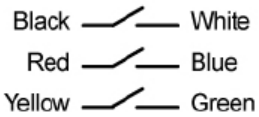

MS5-20
MS7-20

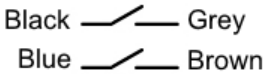

PRE-WIRED HIGH TEMPERATURE

MS5-SS-11-dc-xxHT

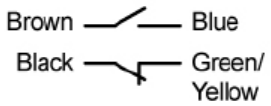

MS5-SS-21-dc-xxHT

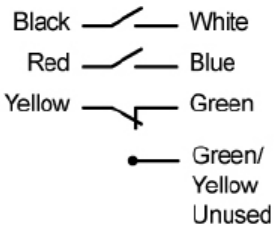

LEADED QUICK DISCONNECT

MS5-20-DC-LQD

Connector Contact Cable

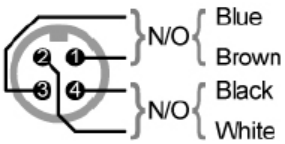

Connector
Micro DC M12

MS5-21-DC-LQD
MS5-SS-DC-21-LQD
MS7-21-DC-LQD
MS7-SS-21-DC-LQD

Connector Contact Cable

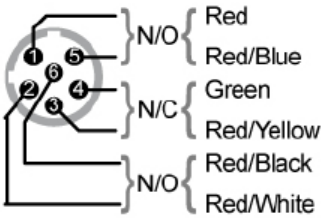

Connector
Micro AC 1/2" - 20

LEADED QUICK DISCONNECT OPTION LQD
150mm Cable with M12 Connector

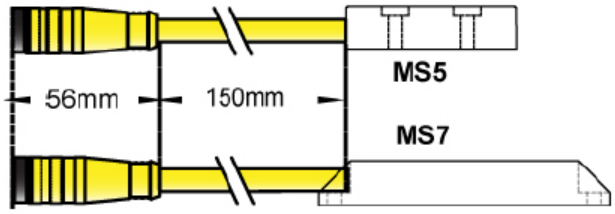

Operation

The MS5 & MS7 safety switches and actuators are designed to approach each other from most angles. When the guard is closed the targets on the printed face of the switch and actuator must be aligned.

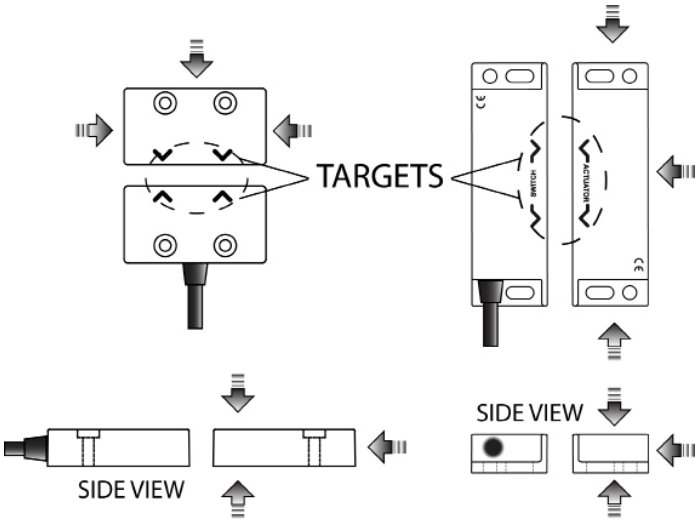

DOWNLOADED FROM WWW.SCATTS.CO.UK

DOWNLOADED FROM WWW.SCATTS.CO.UK

Installation Instructions for Magnasafe - MS5, MS5-SS, MS7 & MS7-SS

Switching Characteristics

The chart shows the switching points in millimetres

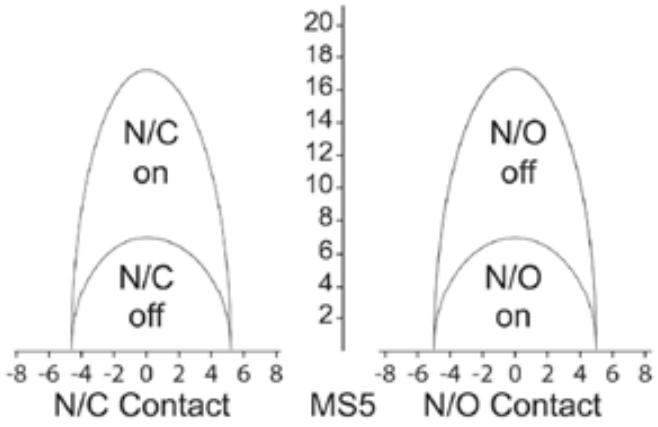

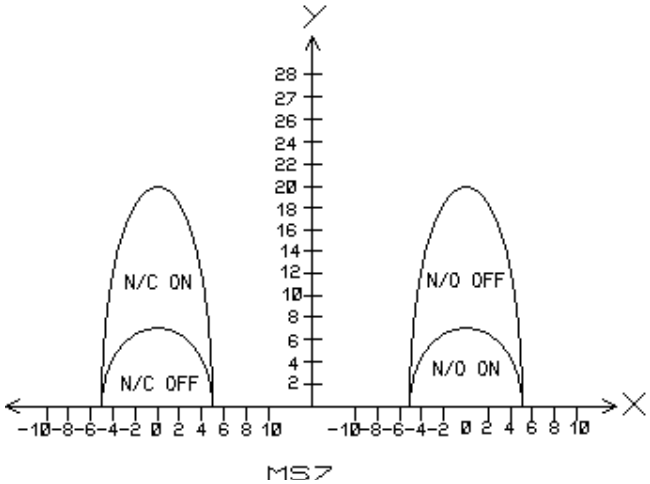

Recommend Safety Control Unit

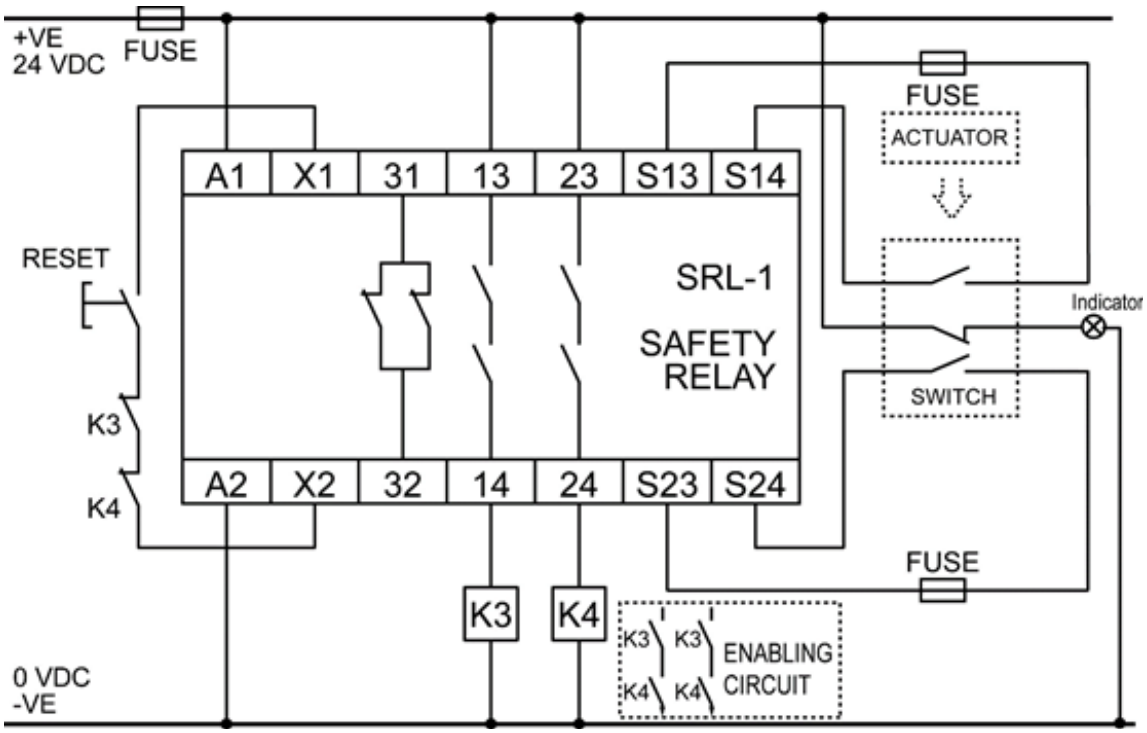

IMPORTANT
All control contacts should be externally fused.
Recommended Safety Control Unit Mechan Part Number: SRL-1 24VAC/DC or EM1 & ESM
Maintenance
It is recommended to check the safe operation of the switches and look for signs of damage or excessive wear on a weekly basis. Damaged units should be replaced or returned to the manufacturer for repair where practical.
Notes
In the interest of product development specifications are subject to change without notice. It is the responsibility of the user to ensure compliance with any acts or by-laws in place. All information regarding Mechan equipment is believed to be accurate at the time of printing. Responsibility cannot be accepted for errors or omissions.

Contact Details

Mechan Controls Ltd, 14/16 Seddon Place, Stanley Industrial Estate, WN8 8EB, United Kingdom, Tel: +441695722264, Web: www.mechancontrols.com

DOWNLOADED FROM WWW.SCATTS.CO.UK

SCATTERGOOD & JOHNSON LTD
ELECTRICAL ENGINEERING & FLUID CONTROL DISTRIBUTORS
Est.1899

At Scattergood & Johnson Ltd, we pride ourselves on being a technical distributor to specialist industries.

Working with a range of quality product suppliers across a number of specialist markets, we are not your average 'box shifter' - we are your technical and supply chain partner.

We fully support every product we sell - for free! Our internal team and external sales engineers can answer any product or application question, no matter the complexity.

Backing up this technical ability is a range of 50,000+ products available from stock for nationwide next day delivery (same day if required!), or you can collect what you need from any of our trade counters around the UK.

Select your specialist interest below to learn more about how we can help.

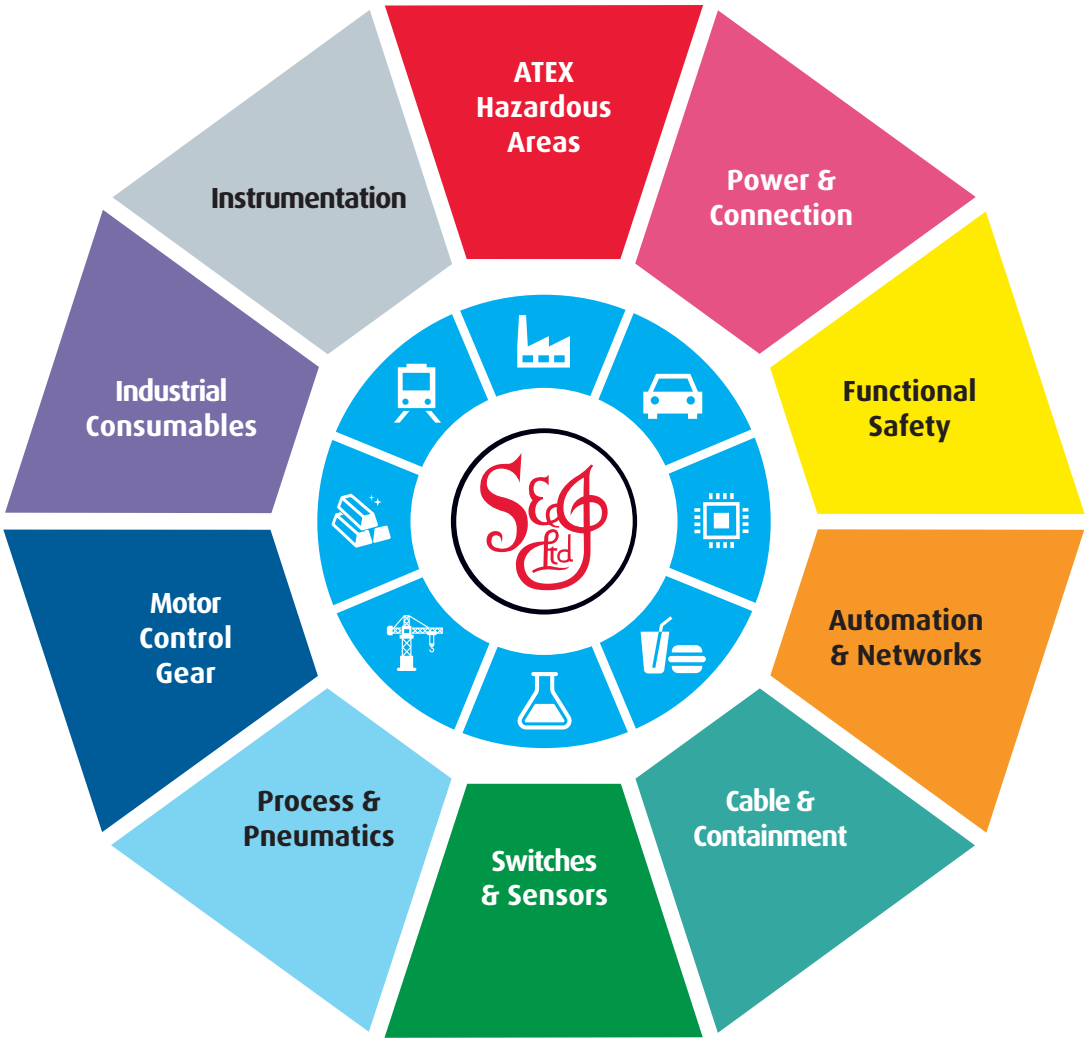

Online, In Branch and On the Road - Scattergood & Johnson Ltd, there when you need us.

www.scatts.co.uk