DOWNLOADED FROM WWW.SCATTS.CO.UK

PROCESS AUTOMATION

MANUAL

Z-System
Zener Barriers

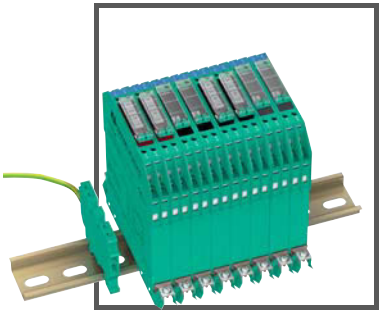

ISO9001

PEPPERL+FUCHS
PROTECTING YOUR PROCESS

DOWNLOADED FROM WWW.SCATTS.CO.UK

DOWNLOADED FROM WWW.SCATTS.CO.UK

With regard to the supply of products, the current issue of the following document is applicable: The General Terms of Delivery for Products and Services of the Electrical Industry, published by the Central Association of the Electrical Industry (Zentralverband Elektrotechnik und Elektroindustrie (ZVEI) e.V.) in its most recent version as well as the supplementary clause: "Expanded reservation of proprietorship"

PEPPERL+FUCHS

DOWNLOADED FROM WWW.SCATTS.CO.UK

DOWNLOADED FROM WWW.SCATTS.CO.UK

1 Introduction 4
1.1 Contents 4
1.2 Target Group, Personnel 5
1.3 Symbols Used 5
2 Product Specifications 7
2.1 Function 7
2.2 Housing Style 12
2.3 Connections 12
2.4 Color Identification 13
2.5 Label Carrier 14
3 Installation 15
3.1 DIN Mounting Rail 15
3.2 Mounting 16
3.3 Connection 17
4 Operation 23
5 Maintenance, Repair, and Dismounting 24
6 Technical Specifications 25
6.1 Typical Characteristics 25
6.2 Technical Data 26
6.3 Order Designation 28
6.4 Dimensions 29

2016-03

DOWNLOADED FROM WWW.SCATTS.CO.UK

DOWNLOADED FROM WWW.SCATTS.CO.UK

1 Introduction

1.1 Contents

This document contains information that you need in order to use your product throughout the applicable stages of the product life cycle. These can include the following:

- Product identification
- Delivery, transport, and storage
- Mounting and installation
- Commissioning and operation
- Maintenance and repair
- Troubleshooting
- Dismounting
- Disposal

Note!

This document does not substitute the instruction manual.

Note!

For full information on the product, refer to the instruction manual and further documentation on the Internet at www.pepperl-fuchs.com.

The documentation consists of the following parts:

- Present document
- Instruction manual
- Datasheet

Additionally, the following parts may belong to the documentation, if applicable:

- EC-type of examination
- EU declaration of conformity
- Attestation of conformity
- Certificates
- Control drawings
- Additional documents

DOWNLOADED FROM WWW.SCATTS.CO.UK

DOWNLOADED FROM WWW.SCATTS.CO.UK

1.2 Target Group, Personnel

Responsibility for planning, assembly, commissioning, operation, maintenance, and dismounting lies with the plant operator.

Only appropriately trained and qualified personnel may carry out mounting, installation, commissioning, operation, maintenance, and dismounting of the product. The personnel must have read and understood the instruction manual and the further documentation.

Prior to using the product make yourself familiar with it. Read the document carefully.

1.3 Symbols Used

This document contains symbols for the identification of warning messages and of informative messages.

Warning Messages

You will find warning messages, whenever dangers may arise from your actions. It is mandatory that you observe these warning messages for your personal safety and in order to avoid property damage.

Depending on the risk level, the warning messages are displayed in descending order as follows:

Danger!
This symbol indicates an imminent danger.

Non-observance will result in personal injury or death.

Warning!
This symbol indicates a possible fault or danger.

Non-observance may cause personal injury or serious property damage.

Caution!
This symbol indicates a possible fault.

Non-observance could interrupt the device and any connected systems and plants, or result in their complete failure.

DOWNLOADED FROM WWW.SCATTS.CO.UK

DOWNLOADED FROM WWW.SCATTS.CO.UK

Informative Symbols

Note!

This symbol brings important information to your attention.

Action

This symbol indicates a paragraph with instructions. You are prompted to perform an action or a sequence of actions.

DOWNLOADED FROM WWW.SCATTS.CO.UK

DOWNLOADED FROM WWW.SCATTS.CO.UK

2 Product Specifications

2.1 Function

Zener barriers limit the amount of energy transferred to the hazardous location to a safe level incapable of igniting the explosive atmosphere. Unlike isolated barriers, zener barriers require a dedicated ground connection.

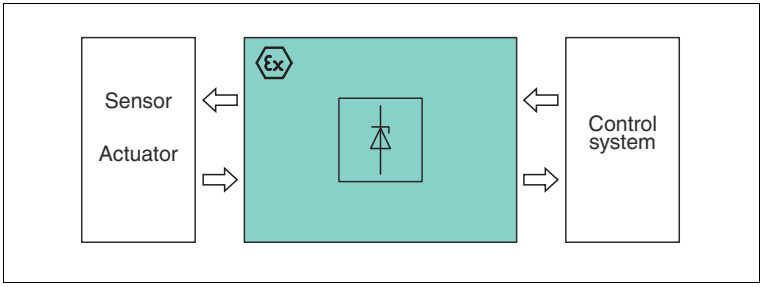

Figure 2.1 Zener barrier function

The Z-System zener barriers have a full range of products for AC and DC intrinsic safety applications with over 75 different models. 1-, 2- and 3-channel versions are available for quick and easy installation.

The zener barriers mount on 35 mm DIN mounting rail. The process of mounting each barrier on the DIN mounting rail makes an electrical connection to the internal earth/ground network necessary to maintain the intrinsic safety rating of the barrier. Replaceable back-up fuse versions are also available to help facilitate circuit loop checks and reduce installation cost and space.

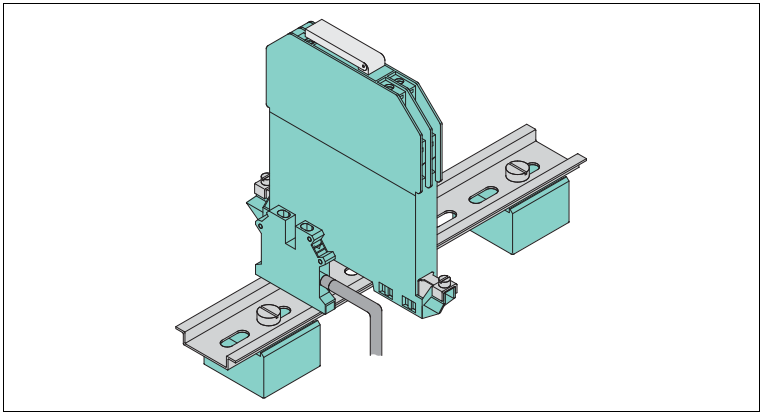

Figure 2.2 Zener barrier on DIN mounting rail

DOWNLOADED FROM WWW.SCATTS.CO.UK

DOWNLOADED FROM WWW.SCATTS.CO.UK

2.1.1 Principal Assembly

Zener barriers have the following assembly.

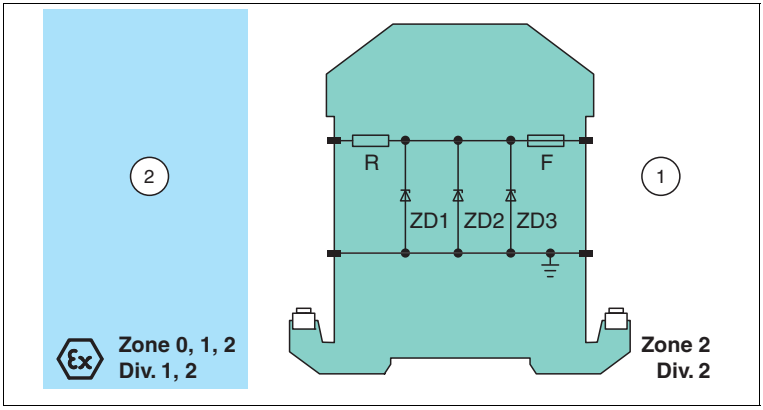

Figure 2.3 Zener barrier function

ZD	Zener diode
R	Current limiting resistor
F	Fuse
⏚	Ground connection
1	Control circuit
2	Field circuit

The zener diode (ZD) limits when there is an overvoltage on the non-hazardous area side, diverting excessive current to the ground connection. The fuse (F) opens to prevent the transfer of unacceptably high energy into the hazardous area. The resistor (R) limits the current in the event of a short circuit in the hazardous area. The dedicated grounding provides the necessary low resistance path for zener diode fault current.

DOWNLOADED FROM WWW.SCATTS.CO.UK

DOWNLOADED FROM WWW.SCATTS.CO.UK

On the control side (1) typically control circuits are connected in non-hazardous area. The condition that the control circuit must satisfy, is that it must not contain a source whose potential relative to earth is greater than 250 V AC or 250 V DC.

On the field side (2) field devices are connected in hazardous area. The field devices are intrinsically safe apparatus and must be certificated unless the electrical values do not exceed any of the following values:

- Voltage 1.5 V
- Current 0.1 A
- Power 25 mW

Pepperl+Fuchs zener barriers are identified in terms of:

- Voltage, i. e. 10 V
- Resistance. i. e. 50 Ω
- Polarity, i. e. positive polarity

These figures correspond to the zener voltage U_z and the total resistance of all zener barrier components. The figures represent the safety values. The values stated on the nameplate correspond to the "worst case" data for U_z (U_o, V_{oc}) and I_k (I_o, I_{sc}) determined during certification.

I_k is obtained by dividing U_z by the resistance R.

Note!

These values do not correspond to the operating range of the zener barrier.

Ideally, zener diodes would not allow any current in the reverse direction until the zener voltage U_z has been attained. In practice, zener diodes do allow a small leakage current, the value of which increases as the applied voltage is increased. The operating range of a zener barrier must therefore be such that it is below the zener voltage, so that the leakage current is restricted to a minimum. Zener barriers are normally tested to ensure that at the prescribed voltage the leakage current is smaller than 10 µA.

DOWNLOADED FROM WWW.SCATTS.CO.UK

DOWNLOADED FROM WWW.SCATTS.CO.UK

The following figure shows the flow of leakage current through the zener diodes by using an example of a zener barrier with 24 V and 300 Ω. Under normal circumstances the zener barrier conducts a maximum of 10 µA leakage current so long as the supply voltage is less than 25.5 V. This is normal and has very little effect on the load.

If the voltage exceeds 25.5 V, the zener diodes start to conduct more current. This can have an effect on the operating current and the accuracy. It is recommended that a regulated voltage source be used, which maintains the voltage under the value at which the diodes will start to conduct. These voltages are stated in the datasheet for a given zener barrier, together with the leakage current. If the leakage current for a given voltage differs from 10 µA (i. e. 1 µA), this is specifically stated.

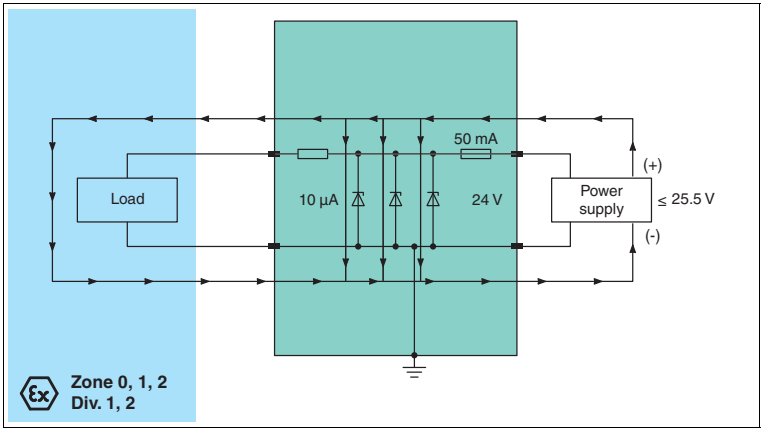

Figure 2.4 Leakage current through the zener diodes

The following figure shows that if the maximum permissible input (supply) voltage is exceeded, the total current drains through the zener diodes, without reaching the hazardous area.

Pepperl+Fuchs zener barriers have a low series resistance, given by the sum of the resistance (R) and the resistance value of the fuse (F). Due to the low series resistance, an inadvertent short circuiting of the terminals on the filed side can cause the fuse to open.

DOWNLOADED FROM WWW.SCATTS.CO.UK

DOWNLOADED FROM WWW.SCATTS.CO.UK

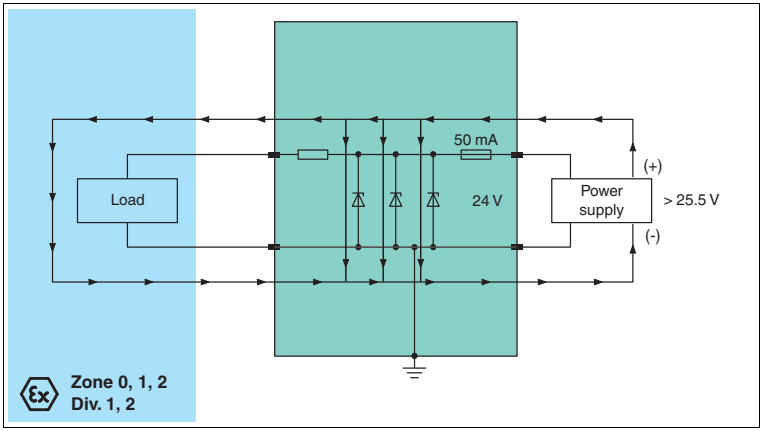

Figure 2.5 Total current drains through the zener diodes

If the Zener Barriers are provided with a resistor, this limits the short circuit current to a safe value in the event of a short circuit of the connecting wiring in the hazardous area or a connection to earth of the wiring attached to terminal 1.

Some barriers are available with a resistor connected between the output terminals. These are used in 4 mA to 20 mA transmitter circuits. The resistor converts the current in the intrinsically safe circuit into a voltage that can be measured in the non-hazardous area.

Pepperl+Fuchs zener barriers can be used in many applications. In the simplest case, a 1-channel zener barrier with a ground connection is used. But in many applications it is not desirable that the intrinsically safe circuit is connected directly to ground. If the circuit in the non-hazardous area is grounded, under some circumstances grounding of the intrinsically safe circuit can lead to faults within the system. In this case, quasi-ground-free intrinsically safe circuits can be constructed with 2-channel or multi-channel zener barriers. Pepperl+Fuchs offers 2- and 3-channel zener barriers in the same housing as the 1-channel zener barriers.

Double grounding of intrinsically safe circuits is not permitted. The insulation voltage of the wiring and field devices, measured with respect to ground, must be greater than 500 V AC.

DOWNLOADED FROM WWW.SCATTS.CO.UK

DOWNLOADED FROM WWW.SCATTS.CO.UK

2.2 Housing Style

The Z-System is a modular product range that features a space saving 12.5 mm wide housing and can incorporate up to 3 channels. The zener barriers are epoxy filled. Zener barriers are designed for degree of protection IP20.

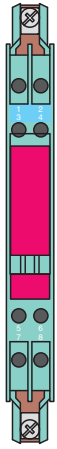

Figure 2.6 12.5 mm housing

2.3 Connections

The terminals are designed as screw terminals. The terminals offer a space for the connection of leads with core cross-sections of up to 2.5 mm^2 (14 AWG).

Note!

For more information see the corresponding datasheets.

DOWNLOADED FROM WWW.SCATTS.CO.UK

DOWNLOADED FROM WWW.SCATTS.CO.UK

2.4 Color Identification

The color identification of the devices has the following meaning:

- Red (1) indicates DC devices with positive polarity.
- Black (2) indicates DC devices with negative polarity.
- Gray (3) indicates AC devices.
- Blue (4) indicates the terminals of the field side (hazardous area).

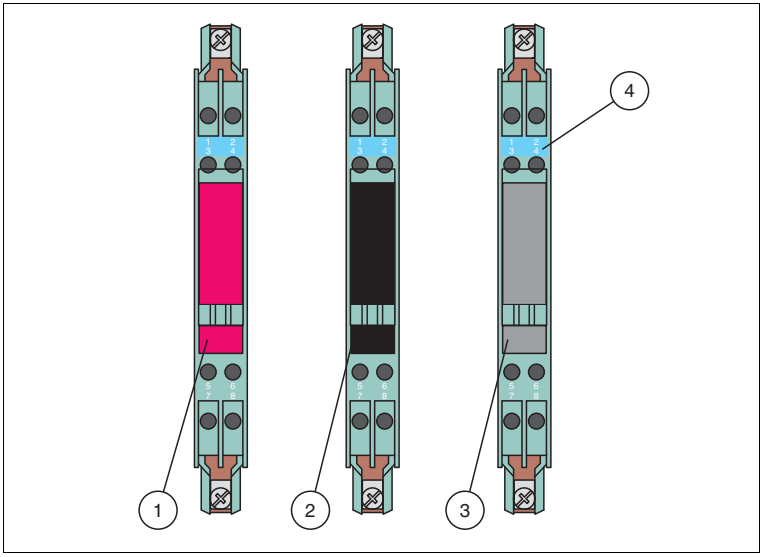

Figure 2.7 Color identification of devices

1 red
2 black
3 gray
4 blue

DOWNLOADED FROM WWW.SCATTS.CO.UK

DOWNLOADED FROM WWW.SCATTS.CO.UK

2.5 Label Carrier

The device has a label carrier on the front side for individual marking.

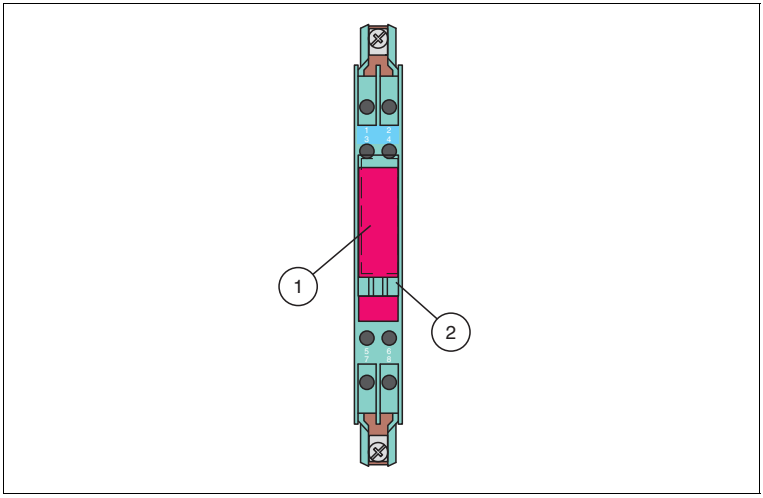

Figure 2.8 Label carrier on the front side

1 Label ZH-ES/LB with labeling field 29 mm x 8 mm

2 Label carrier ZH-Z.BT

DOWNLOADED FROM WWW.SCATTS.CO.UK

DOWNLOADED FROM WWW.SCATTS.CO.UK

3 Installation

3.1 DIN Mounting Rail

The devices are mounted on a 35 mm DIN mounting rail according to EN 60715.

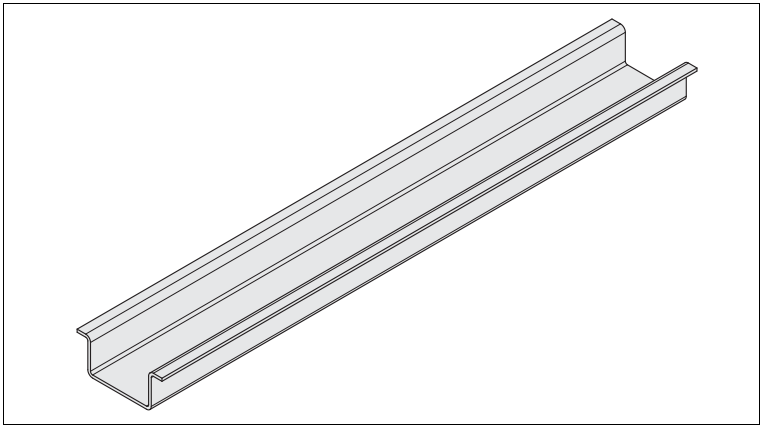

Figure 3.1 Example: DIN mounting rail (35 mm x 15 mm)

DOWNLOADED FROM WWW.SCATTS.CO.UK

DOWNLOADED FROM WWW.SCATTS.CO.UK

3.2 Mounting

Mounting in the Non-Hazardous Area

Mounting the Device

Snap the device onto the DIN mounting rail. See figure below.

Mounting in Zone 2

For mounting in the hazardous area observe the following warning messages.

Danger!
Explosion hazard from wrong mounting

Operating the device without a surrounding enclosure can cause sparks. This can ignite the surrounding potentially explosive atmosphere.

Mount the device in a surrounding enclosure that complies with IEC/EN 60079–0and that is rated with the degree of protection IP54 according to IEC/EN 60529.

Mounting the Device

Snap the device onto the DIN mounting rail. See figure below.

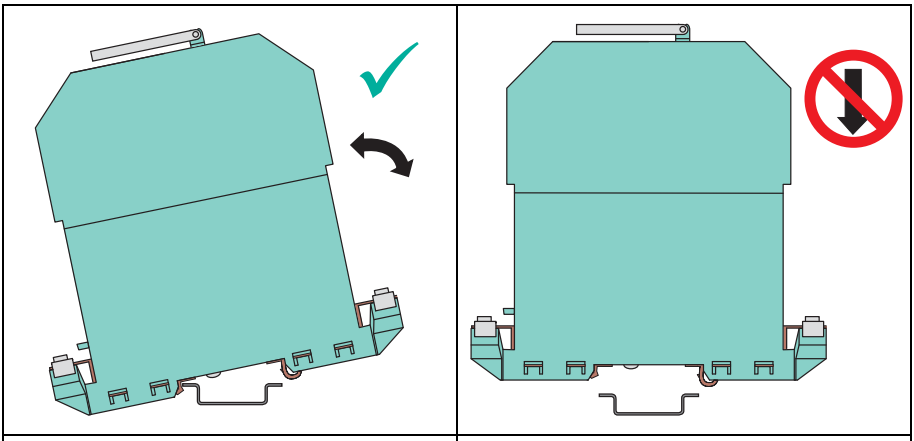

CORRECT: Device snapped on from the side.	INCORRECT: Device snapped on vertically.

Figure 3.2

DOWNLOADED FROM WWW.SCATTS.CO.UK

DOWNLOADED FROM WWW.SCATTS.CO.UK

3.3 Connection

Danger!
Explosion hazard from wrong or missing grounding

Wrong or missing grounding can cause sparks. This can ignite the surrounding potentially explosive atmosphere.

- Ground the device. Observe the grounding requirements for type of protection Ex i according to IEC/EN 60079–14.
- Ensure that external ground connections exist, are in good condition, and are not damaged or corroded.

Danger!
Explosion hazard from live wiring

If you connect or disconnect energized non-intrinsically safe circuits in a potentially explosive atmosphere, sparks can ignite the surrounding atmosphere.

Only connect or disconnect energized non-intrinsically safe circuits in the absence of a potentially explosive atmosphere.

Danger!
Explosion hazard from wrong separation distances

If you do not observe the minimum separation distance between 2 intrinsically safe circuits, this can lead to added currents or voltages. This can result in a current/voltage flashover generating sparks. The sparks can ignite the surrounding potentially explosive atmosphere.

Ensure you observe all separation distances between 2 adjacent intrinsically safe circuits according to IEC/EN 60079-14.

Danger!
Danger to life from incorrect installation

Incorrect installation of cables and connection lines can compromise the function and the electrical safety of the device.

- Observe the permissible core cross-section of the conductor.
- When using stranded conductors, crimp wire end ferrules on the conductor ends.
- Use only one conductor per terminal.
- When installing the conductors the insulation must reach up to the terminal.
- Observe the tightening torque of the terminal screws.

DOWNLOADED FROM WWW.SCATTS.CO.UK

DOWNLOADED FROM WWW.SCATTS.CO.UK

Connecting Circuits

1. Ground the device. Use the integrated ground connection of the zener barrier for grounding.
   The conductor cross-section of the ground connection, using a copper conductor, must be at least 4 mm² (12 AWG).
2. Connect the field circuit.
3. Connect the control circuit.

Note!

For more information on grounding see chapter 3.3.1.

Note!

For more information see the corresponding datasheets.

3.3.1 Grounding with Zener Barriers

Intrinsically safe circuits with zener barriers without galvanic isolation must be grounded. Observe the grounding requirements according to IEC/EN 60079–14 and NEC 504-50. The maintenance of these requirements prevents the occurrence of a dangerous potential with respect to ground.

If the zener barrier is not grounded and a fault occurs a dangerous spark can cause.

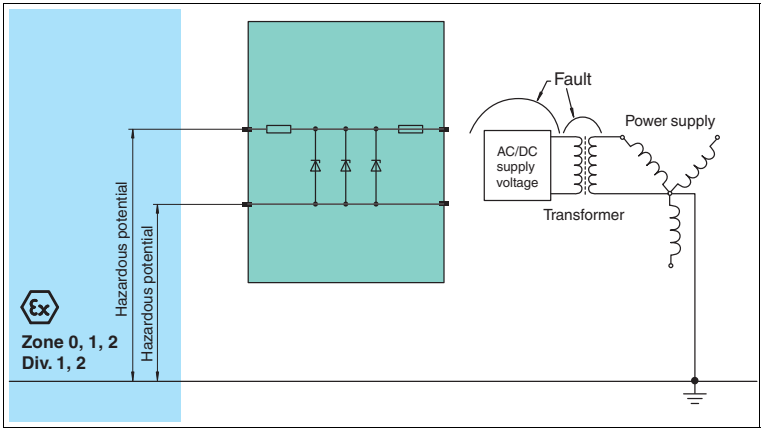

Figure 3.3 Non-grounded zener barrier

2016-03

PEPPERL+FUCHS

DOWNLOADED FROM WWW.SCATTS.CO.UK

DOWNLOADED FROM WWW.SCATTS.CO.UK

If the zener barrier is grounded and a fault occurs the zener diodes conducts. The current is shunted to ground. The fuse opens.

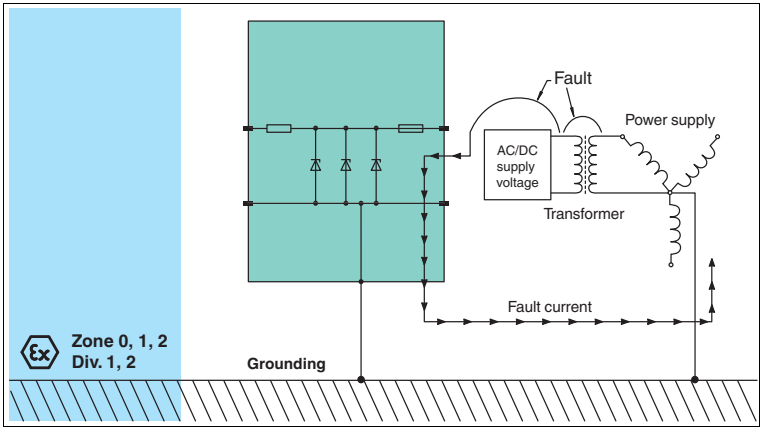

Figure 3.4 Grounded zener barrier

The system must have its own independent ground conductor, through which no supply system current flows.

The Z-system grounding is made by an integrated ground connection in the base of each zener barrier. By connecting each zener barrier to the 35 mm DIN mounting rail, the total system can be grounded via a single point. The following figures show several grounding schemes.

- Equipotential bonding via DIN mounting rail
- Group grounding through insulated mounting
- Individual grounding through insulated mounting

DOWNLOADED FROM WWW.SCATTS.CO.UK

DOWNLOADED FROM WWW.SCATTS.CO.UK

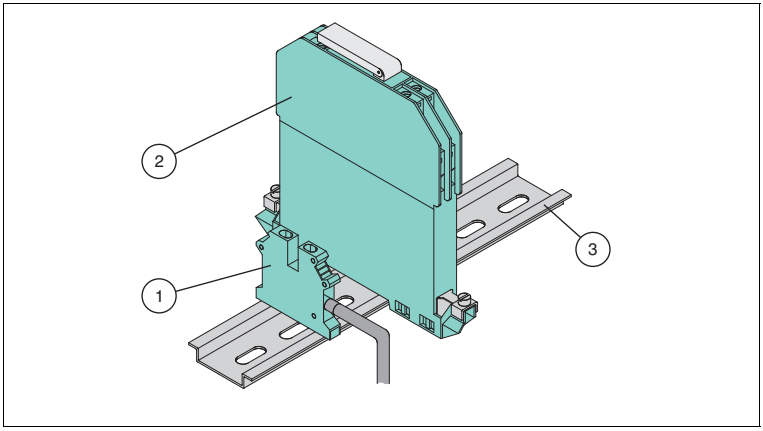

Figure 3.5 Equipotential bonding via the DIN mounting rail

1 Terminal block USLKG5
2 Zener barrier
3 35 mm DIN mounting rail according to EN 60715

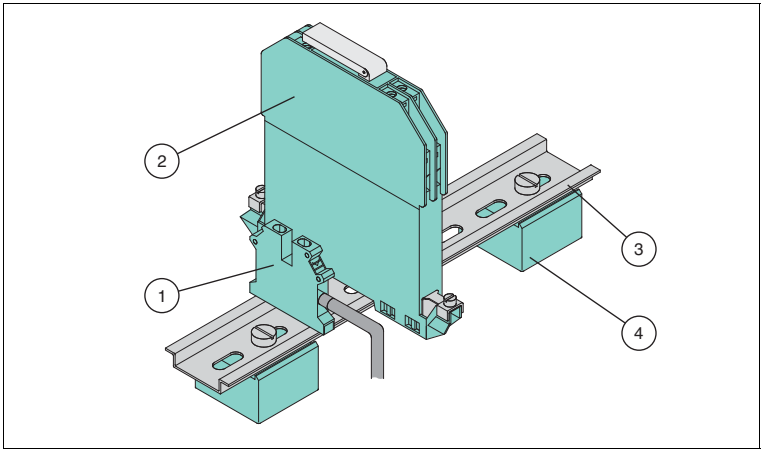

Figure 3.6 Insulated mounting (group grounding)

1 Terminal block USLKG5
2 Zener barrier
3 35 mm DIN mounting rail according to EN 60715
4 Adapter ZH-Z.AB/NS

DOWNLOADED FROM WWW.SCATTS.CO.UK

DOWNLOADED FROM WWW.SCATTS.CO.UK

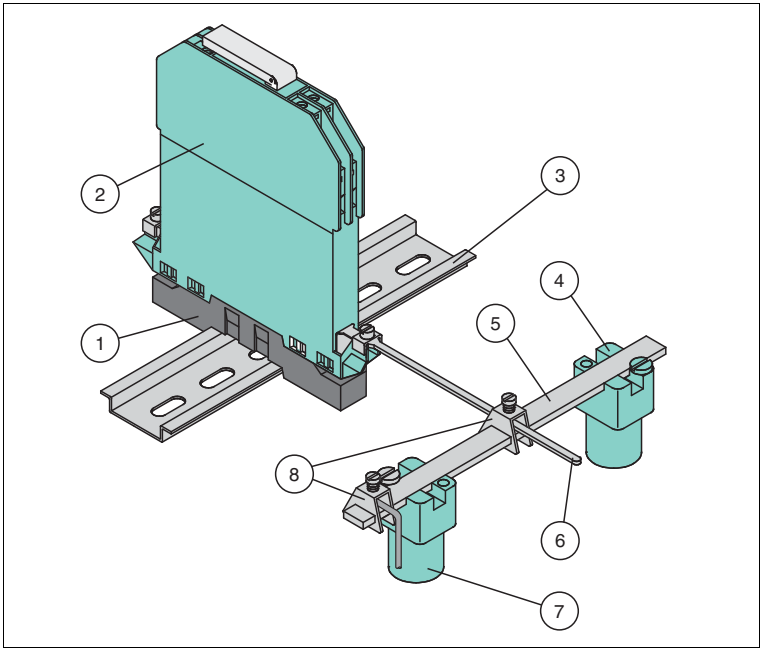

Figure 3.7 Insulated mounting (individual grounding)

1 Single socket ZH-Z.ES
2 Zener barrier
3 35 mm DIN mounting rail according to EN 60715
4 Adapter ZH-Z.AB/SS
5 Grounding bar ZH-Z.NLS-Cu3/10
6 Grounding bar feed ZH-Z.LL
7 Spacer ZH-Z.AR.125
8 Terminal ZH-Z.AK16

DOWNLOADED FROM WWW.SCATTS.CO.UK

DOWNLOADED FROM WWW.SCATTS.CO.UK

3.3.2 Grounding with Multi-Channel Zener Barriers

Analog circuits are often connected to 2-channel zener barriers, see Figure 3.9. Since there is no grounding on this type of circuit, the system is a quasi-floating one. Because it is one zener voltage above the ground potential. Although it does not actually float, the signal-to-noise ratio is improved.

A further advantage of multi-channel zener barriers is that a higher packing density can be achieved.

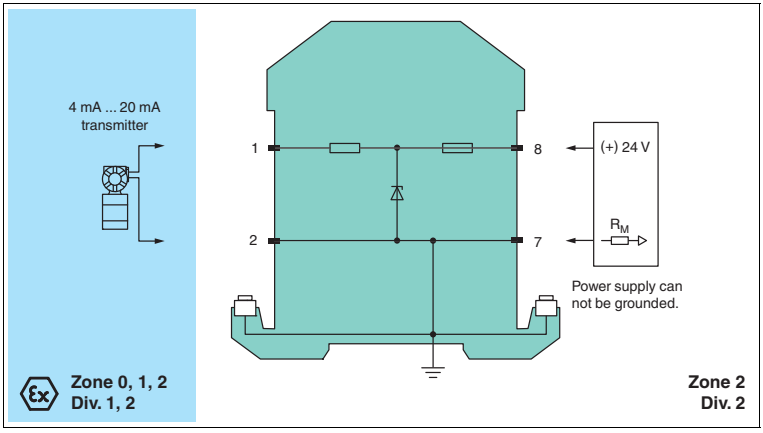

Figure 3.8 Grounding with 1-channel zener barrier

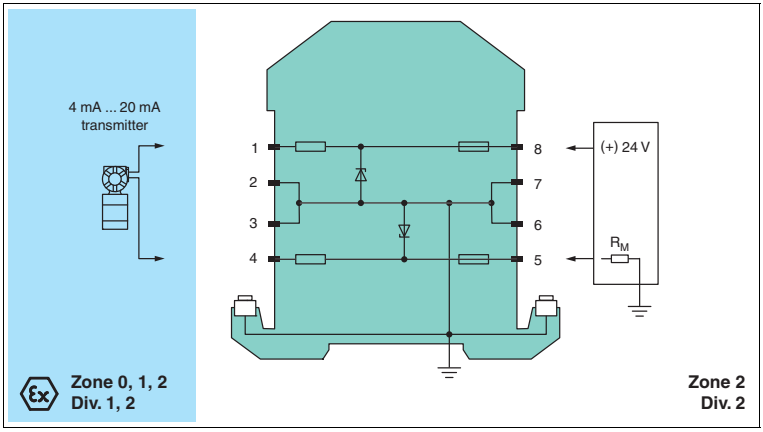

Figure 3.9 Grounding with 2-channel zener barrier

DOWNLOADED FROM WWW.SCATTS.CO.UK

DOWNLOADED FROM WWW.SCATTS.CO.UK

4 Operation

Operation in the Non-Hazardous Area

Danger!
Explosion hazard from wrong or missing grounding

Wrong or missing grounding can cause sparks. This can ignite the surrounding potentially explosive atmosphere.

- Ground the device. Observe the grounding requirements for type of protection Ex i according to IEC/EN 60079–14.
- Ensure that external ground connections exist, are in good condition, and are not damaged or corroded.

Operation in Zone 2

For operation in the hazardous area observe the following warning messages additionally.

Danger!
Explosion hazard from live wiring

If you connect or disconnect energized non-intrinsically safe circuits in a potentially explosive atmosphere, sparks can ignite the surrounding atmosphere.

Only connect or disconnect energized non-intrinsically safe circuits in the absence of a potentially explosive atmosphere.

Danger!
Explosion hazard from changing the fuse

The changing of the fuse under voltage can cause sparks. This can ignite the surrounding potentially explosive atmosphere.

De-energize the device before changing the fuse.

Connecting Circuits

1. Ground the device. Use the integrated ground connection of the zener barrier for grounding.
   The conductor cross-section of the ground connection, using a copper conductor, must be at least 4 mm² (12 AWG).
2. Connect the field circuit.
3. Connect the control circuit.

DOWNLOADED FROM WWW.SCATTS.CO.UK

DOWNLOADED FROM WWW.SCATTS.CO.UK

5 Maintenance, Repair, and Dismounting

Danger!

Danger to life from using damaged or repaired devices.

Using a defective or repaired device can compromise its function and its electrical safety.

- Do not use a damaged or polluted device.
- The device must not be repaired, changed or manipulated.
- If there is a defect, always replace the device with an original device from Pepperl+Fuchs.

Disconnecting Circuits

1. Disconnect the field circuit.
2. Disconnect the control circuit.
3. Disconnect the grounding.

Removing the Device

Remove the device. See figure below.

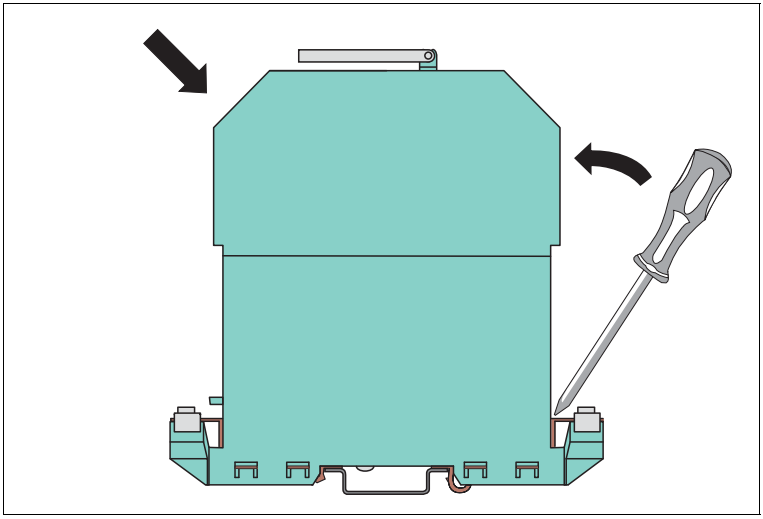

Figure 5.1

DOWNLOADED FROM WWW.SCATTS.CO.UK

DOWNLOADED FROM WWW.SCATTS.CO.UK

6 Technical Specifications

6.1 Typical Characteristics

The following are typical characteristics used in the description of a zener barrier.

Working voltage at 10 µA

The maximum voltage that can be applied between the terminals in the non-hazardous area and ground at a defined leakage current. This is the upper value of the recommended operating range.

Maximum series resistance (Ω)

This is the maximum resistance that can be measured between the two end terminals of a barrier channel. It is obtained from the sum of any resistors and the resistance value of the fuse at an ambient temperature of 20 °C (68 °F).

Maximum supply voltage

The maximum voltage that can be supplied between the terminals in the non-hazardous area and ground without the fuse responding. This value is determined for an intrinsically safe circuit and an ambient temperature of 20 °C (68 °F).

Fuse rating (mA)

The function of the fuse is to create an open circuit in the event of a power supply fault. It also protects the zener diodes from damage in the event of an abnormal operating condition.

Polarity

Zener barriers are available in various versions. On zener barriers for positive polarity the anodes of the zener diodes are grounded. On Zener barriers for negative polarity the cathodes are grounded. On zener barriers for alternating polarity (AC), interconnected zener diodes are employed and one side is grounded. These zener barriers can be used for both alternating voltage signals and direct voltage signals.

Note!

For more information see the corresponding datasheets.

DOWNLOADED FROM WWW.SCATTS.CO.UK

DOWNLOADED FROM WWW.SCATTS.CO.UK

6.2 Technical Data

Mechanical Specifications

Mounting

Snap-on 35 mm DIN mounting rail according to EN 60715

Housing Material

Polycarbonate (PC)

Dimensions

Dimension drawings refer to chapter Dimensions.

Degree of Protection

IP20 according to EN 60529

Connection

- Screw terminals for leads of up to a max. of 2 x 2.5 mm^2 (2 x 14 AWG)
- Observe the tightening torque of the terminal screws. The tightening torque is 0.5 Nm to 0.6 Nm.

Ambient Conditions

Ambient Temperature

-20 °C to 60 °C (-4 °F to 140 °F)

Storage Temperature

-25 °C to 70 °C (-13 °F to 158 °F)

Relative Humidity

max. 75 % without moisture condensation

DOWNLOADED FROM WWW.SCATTS.CO.UK

DOWNLOADED FROM WWW.SCATTS.CO.UK

Accessories

Mounting Accessories

For the different grounding options special accessories are needed.
See chapter 3.3.1.

Equipotential bonding via DIN mounting rail	• Terminal block USLKG5 • 35 mm DIN mounting rail according to EN 60715
Group grounding through insulated mounting	• Terminal block USLKG5 • 35 mm DIN mounting rail according to EN 60715 • Adapter ZH-Z.AB/NS
Individual grounding through insulated mounting	• Single socket ZH-Z.ES • 35 mm DIN mounting rail according to EN 60715 • Adapter ZH-Z.AB/SS • Grounding bar ZH-Z.NLS-Cu3/10 • Grounding bar feed ZH-Z.LL • Spacer ZH-Z.AR.125 • Terminal ZH-Z.AK16

Further Accessories

- Empty housing zener barrier Z799
  This zener barrier is an empty housing. This device will be used as a dummy, to reserve place and wiring for future expansions.
- Label carrier ZH-Z.BT
- Label ZH-ES/LB with labeling field 29 mm x 8 mm

Note!

For more information see the corresponding datasheets.

DOWNLOADED FROM WWW.SCATTS.CO.UK

DOWNLOADED FROM WWW.SCATTS.CO.UK

6.3 Order Designation

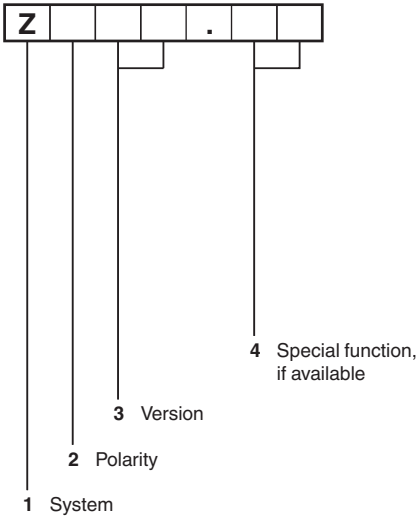

Position 1	Z	Z-System
Position 2	0	DC device with positive polarity
	7	DC device with positive polarity
	8	DC device with negative polarity
	9	AC device
Position 4	1K	With increased nominal resistance 1 kΩ
	CL	With current limiting
	F	With replaceable back-up fuse
	H	High power version
	R	With internal measuring resistor

DOWNLOADED FROM WWW.SCATTS.CO.UK

DOWNLOADED FROM WWW.SCATTS.CO.UK

6.4 Dimensions

6.4.1 Housing Types Zener Barriers Z-System

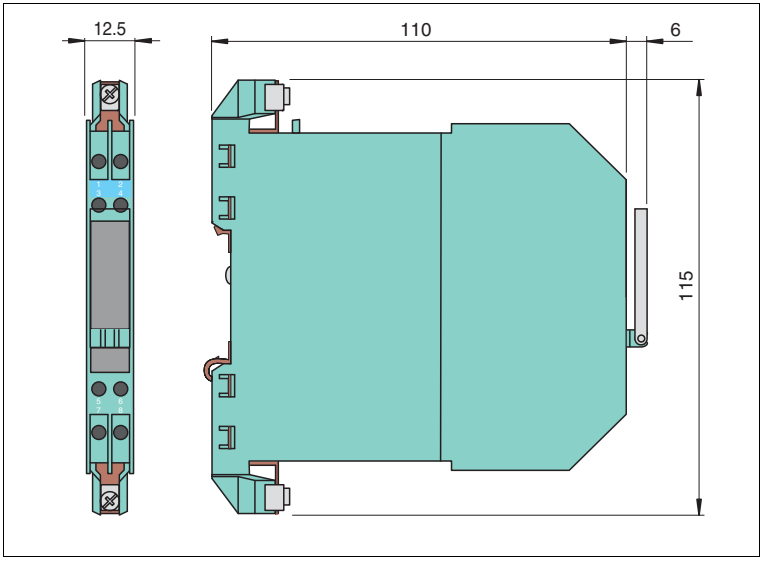

Figure 6.1

DOWNLOADED FROM WWW.SCATTS.CO.UK

DOWNLOADED FROM WWW.SCATTS.CO.UK

DOWNLOADED FROM WWW.SCATTS.CO.UK

DOWNLOADED FROM WWW.SCATTS.CO.UK

DOWNLOADED FROM WWW.SCATTS.CO.UK

DOWNLOADED FROM WWW.SCATTS.CO.UK

PROCESS AUTOMATION – PROTECTING YOUR PROCESS

Worldwide Headquarters
Pepperl+Fuchs GmbH
68307 Mannheim · Germany
Tel. +49 621 776-0
E-mail: info@de.pepperl-fuchs.com

For the Pepperl+Fuchs representative
closest to you check www.pepperl-fuchs.com/contact

www.pepperl-fuchs.com

PEPPERL+FUCHS
PROTECTING YOUR PROCESS

Subject to modifications
Copyright PEPPERL+FUCHS • Printed in Germany

DOCT-0185J
03/2016

DOWNLOADED FROM WWW.SCATTS.CO.UK

SCATTERGOOD & JOHNSON LTD
ELECTRICAL ENGINEERING & FLUID CONTROL DISTRIBUTORS
Est.1899

At Scattergood & Johnson Ltd, we pride ourselves on being a technical distributor to specialist industries.

Working with a range of quality product suppliers across a number of specialist markets, we are not your average 'box shifter' - we are your technical and supply chain partner.

We fully support every product we sell - for free! Our internal team and external sales engineers can answer any product or application question, no matter the complexity.

Backing up this technical ability is a range of 50,000+ products available from stock for nationwide next day delivery (same day if required!), or you can collect what you need from any of our trade counters around the UK.

Select your specialist interest below to learn more about how we can help.

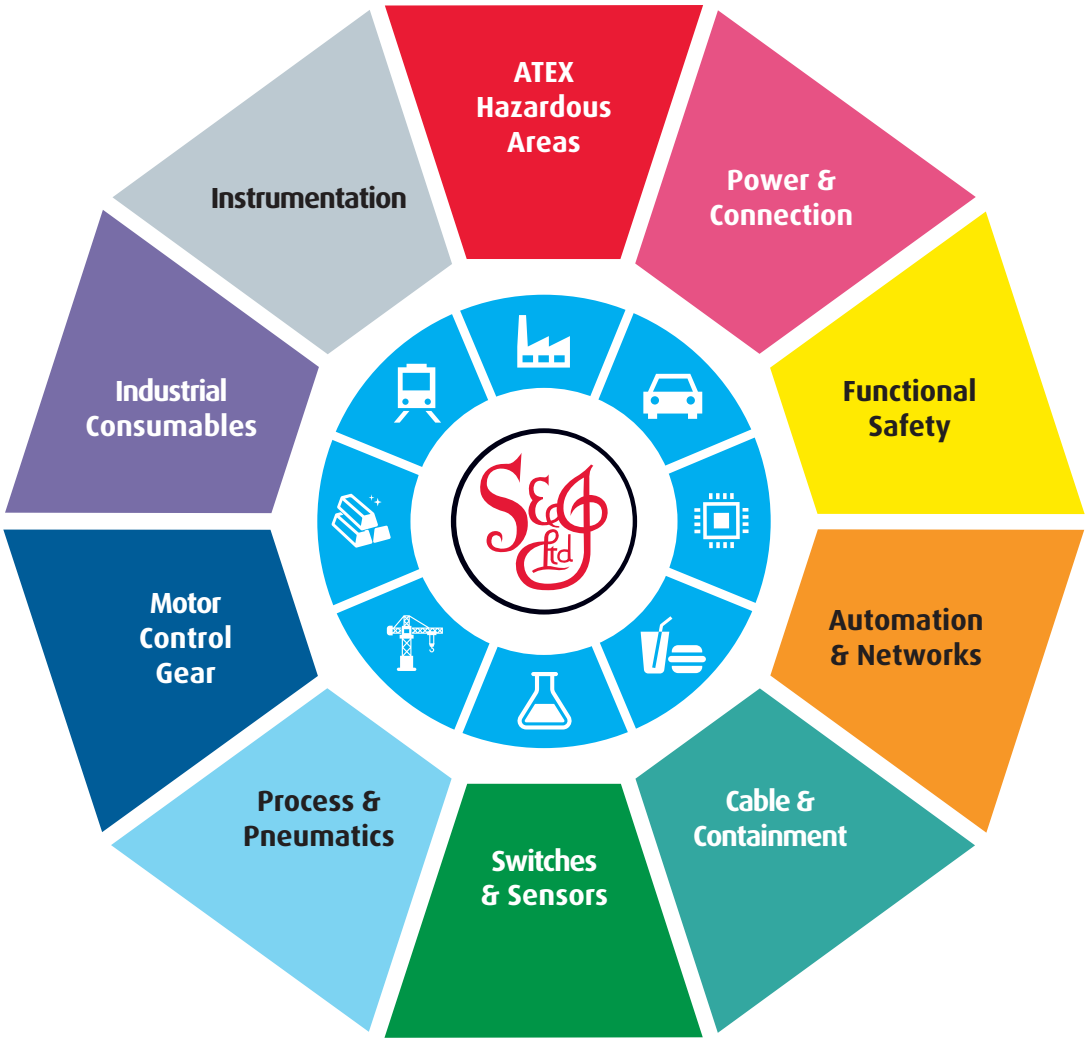

Online, In Branch and On the Road - Scattergood & Johnson Ltd, there when you need us.

www.scatts.co.uk