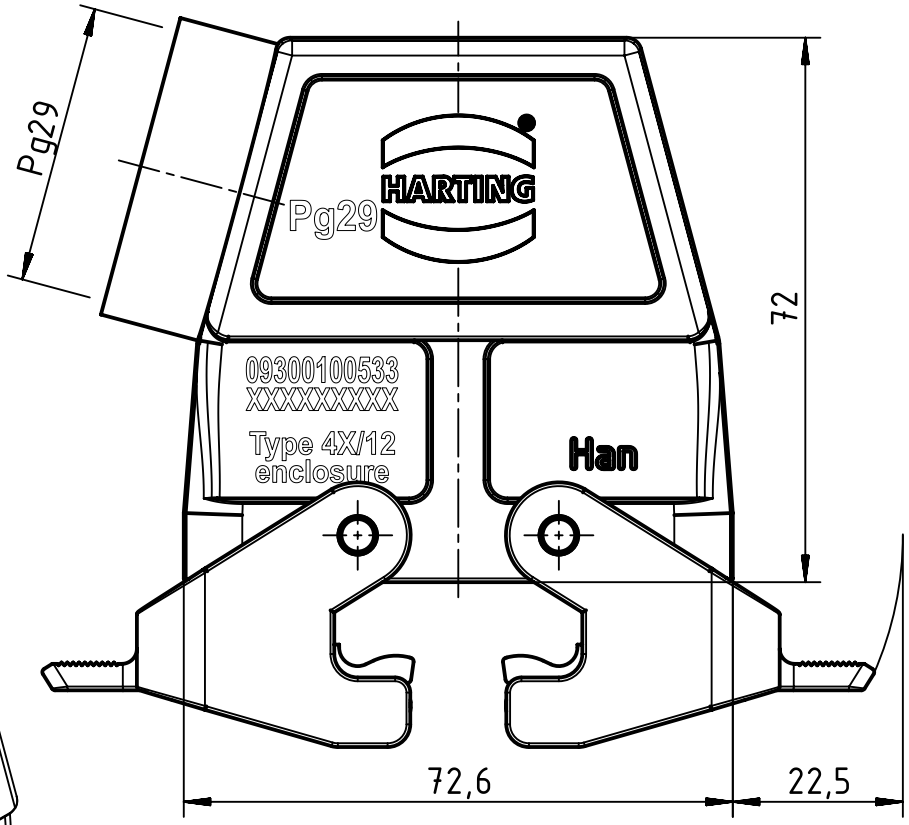

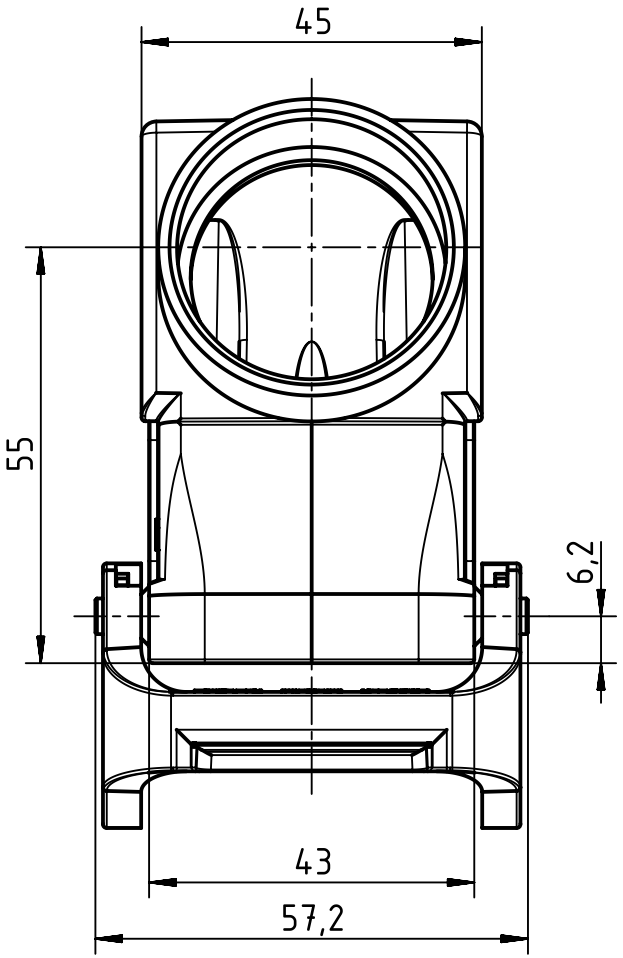

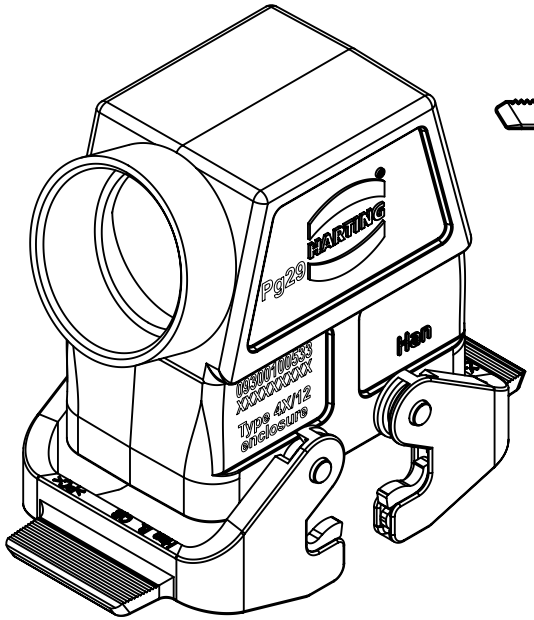

All Dimensions in mm Original Size DIN A4	Scale 1:1	Free size tol.		Ref. Sub.	
All rights reserved Department EL PD	Created by SPREENB	Inspected by GERB	Standardisation RUETERA	Date 2020-02-28	State Final Release
HARTING Electric GmbH & Co. KG D-32339 Espelkamp	Title Han 10B-gs-QB-29				Doc-Key / ECM-Nr. 100231491/UGD/002/D 500000163147
	Type TB	Number 09 30 010 0533		Rev. D	Page 1/1

A4