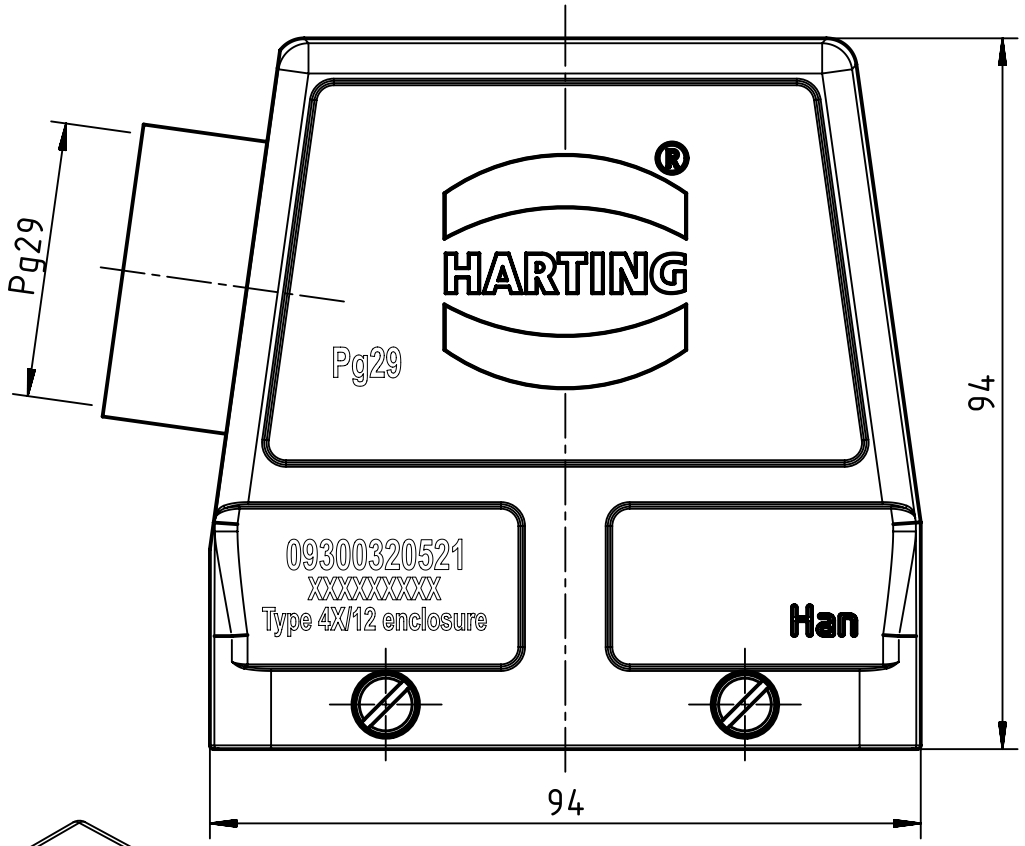

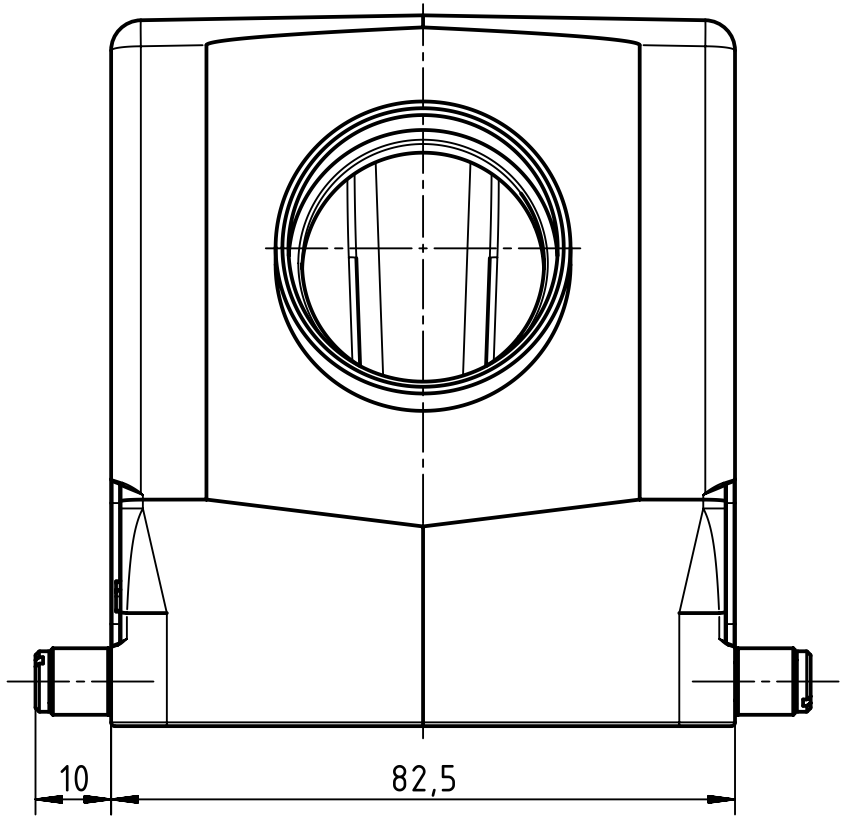

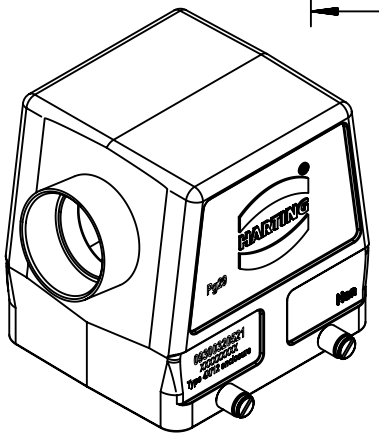

All Dimensions in mm Original Size DIN A4	Scale 1:1	Free size tol.		Ref. Sub.	
All rights reserved Department EL PD	Created by FINKEV	Inspected by GERB	Standardisation GARSKE	Date 2019-08-30	State Final Release
HARTING Electric GmbH & Co. KG D-32339 Espelkamp	Title Han B Hood Side Entry HC 4 Pegs PG 29				Doc-Key / ECM-Nr. 100186071/UGD/004/D 500000155829
	Type TB	Number 09 30 032 0521		Rev. D	Page 1/1

A4