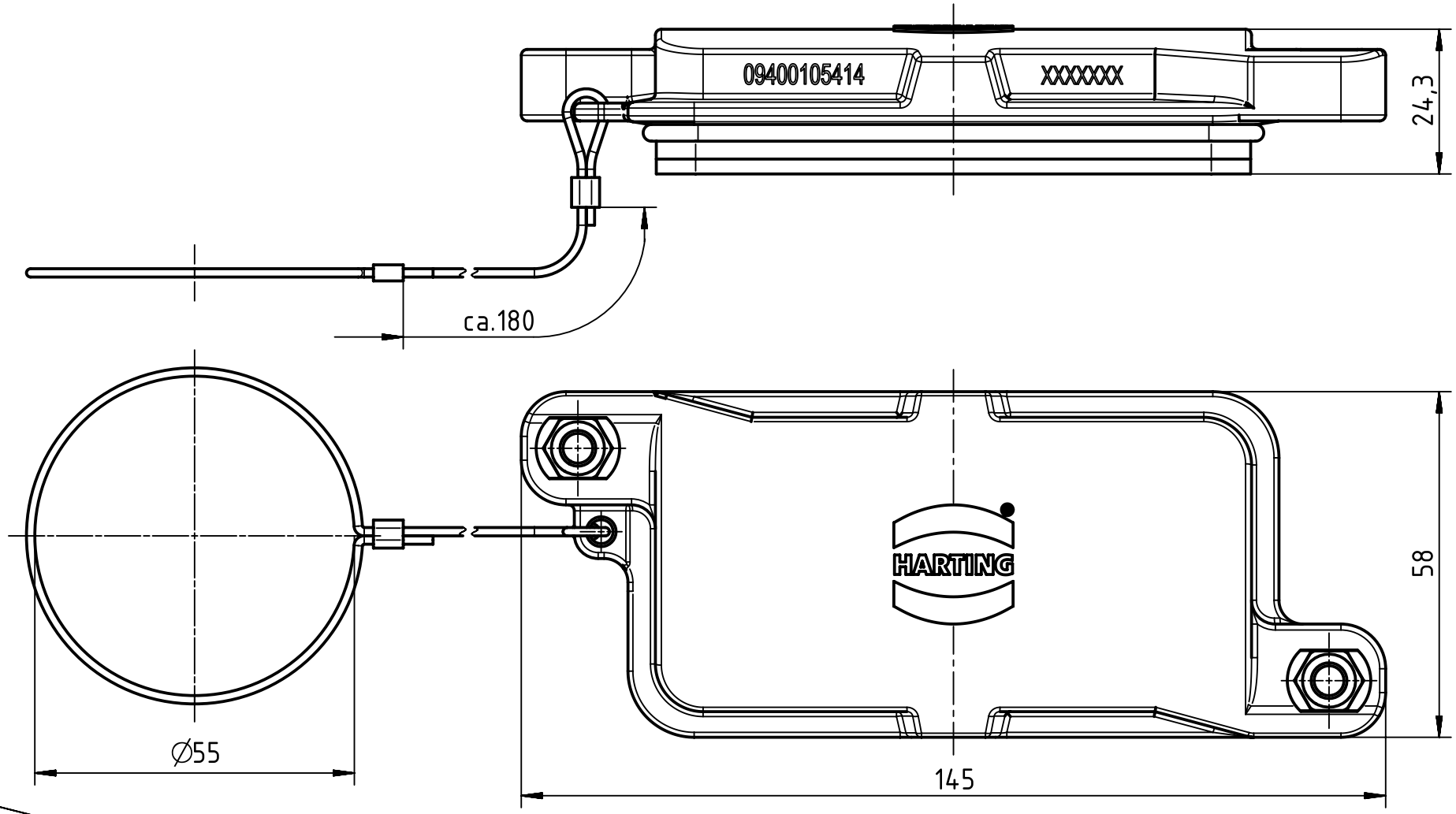

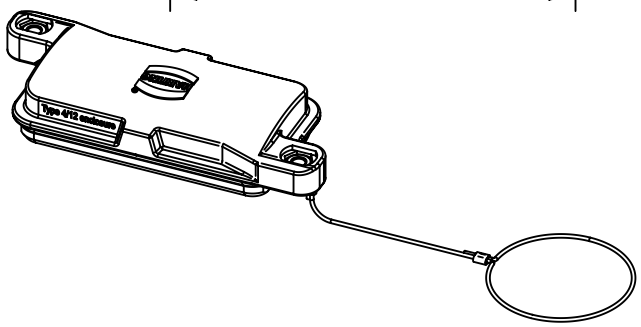

All Dimensions in mm Original Size DIN A4	Scale 1:1	Free size tol.		Ref. Sub.	
All rights reserved Department EL PD - DE	Created by LONGL	Inspected by DINGB	Standardisation TIEMANNA	Date 2015-12-21	State Final Release
HARTING Electric GmbH & Co. KG D-32339 Espelkamp	Title Han 10HPR hood cover screw locking				Doc-Key / ECM-Nr. 100227421/UGD/002/C 500000098701
	Type TB	Number 09 40 010 5414		Rev. C	Page 1/1

A4