Han® 3A RJ45 Hybrid Cat6

RoHS compliant

General information

Design	Hybrid connector for Ethernet communication and power supply
Product standard	IEC 61076-3-106 (Variant 5)
No. of contacts	8 + 4 (2x4 for Ethernet + 4x power)
Transmission rate	10 / 100 Mbit/s and 1 / 2,5 / 5 / 10 Gbit/s
Transmission performance	Category 6/6A / Class EA up to 500 MHz acc. to ISO/IEC 11801:2002, EN 50173-1
Shielding	Fully shielded, 360° shielding contact
Degree of protection	IP65/67
Mating cycles	Min. 500
UL certification	E 102079
RoHS - complainant	yes
Lead free	yes

Cable specification and termination details for the plug side

Cable diameter (plug)	6 to 12 mm
Ethernet	
IDC types (Cat. 6)	
Conductor cross section	AWG 27 to AWG 22 (solid and stranded)
Conductor diameter	Max. 1,6 mm
Piercing types (Cat. 6A)	
Conductor cross section	AWG 28/7 to AWG 24/7 (stranded)
Conductor diameter	Max. 1,05 mm
Power	IDC contacts 4x 1,5 mm^2 (stranded)

Panel feed-through

Mating interface extern:	RJ45 acc. to IEC 60603-7 for Ethernet and 4 power contacts
Mating interface intern:	RJ45 acc. to IEC 60603-7 for Ethernet and 4 PCB terminals
Power	
Conductor cross section PCB terminal	0,5 to 2,5mm^2 (solid and stranded)

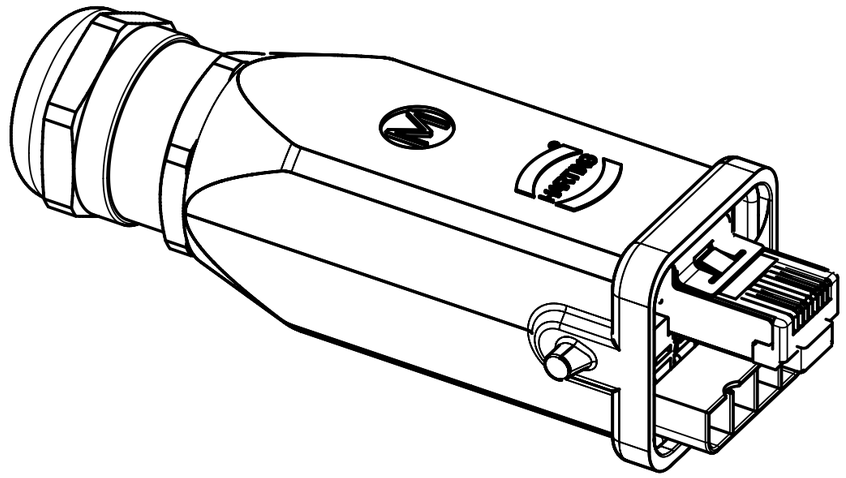

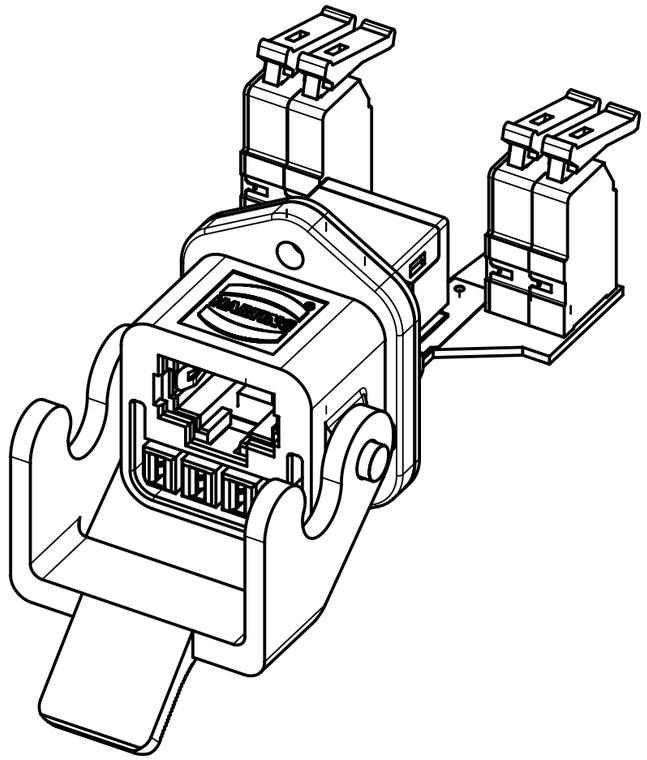

All Dimensions in mm
Original Size DIN A3

Scale	Free size tol.	Ref.
1:1		Sub. DS 21 03 520 10 01 / EC04876 / 13.04.2010

All rights reserved

Department EC PD - RO

HARTING Electronics GmbH
D-32339 Espelkamp

Created by	Inspected by	Standardisation	Date	State
DRAGHICI	AVRAM	HOFFMANN	2017-05-03	Final Release

Title: Han® 3A RJ45 Hybrid Cat6

Doc-Key / ECM-Nr.: 100637182/UGD/000/A 500000109451

Type: DS | Number: 09452251760 | Rev.: A | Page: 1/3

A3

Han® 3A RJ45 Hybrid Cat6

RoHS compliant

Electrical specification	
RJ45 Ethernet connection	
Rated current	1,5 A (all pins) values at 20°C
Rated voltage	50 V AC / 60 V DC
Contact Resistance	RJ45 Signal: ΔRD ≤ 20 mΩ / RJ45 Shielding: RD ≤ 100 mΩ / Power: ΔRD ≤ 4 mΩ
Insulation Resistance	500 MΩ min. (500 V DC)
Voltage Proof	Contact / Contact:1kV dc or ac peak; Contact / Test panel: 1.5kV dc or ac peak
Mechanical operation with electrical load (IEC 60512 - test 9c)	Unmating under electrical load with: 1,2 A / 50 V 50 cycles for each polarity
PoE	PoE IEEE 802.3af PoE+ IEEE 802.3at 4PPoE IEEE 802.3bt
Power connection	
Rated voltage	48 V / DC
Rated current	16 A

Derating diagram acc. to IEC512 (Current carrying capacity)

Current-carrying capacity	1,76 A @ 0°C

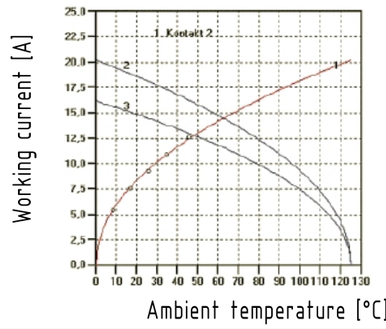

1 Temperature rise

2 Derating

3 Derating curve at Imax * 0.8 (DIN IEC 512)

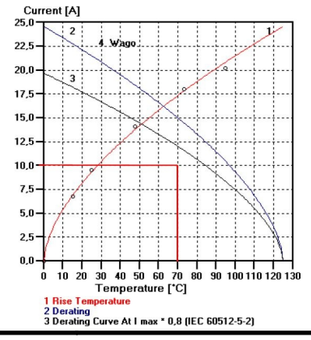

Mechanical specification	
Insertion force	30 N max
Withdrawal force	30 N max
Mechanical Operation	500 times insertions and extractions / mating speed: 10 mm/s max. / rest: 5s, min.(unmated)
Lock Strength	Min. 100 N (for the mating axis direction in state in fitted with applicable connector)
Wrenching Strength	Applying 25times of 30 N 1 s for 2 axis direction on tip of plug case in state in fitted with applicable connector

Environment specification	
Storage temperature range	-40°C to +70°C (95% RH max.)
Operating temperature range	-40°C to +70°C (95% RH max.)
Rapid change of temperature (IEC 60512-11d)	10 cycles between -55°C and 85°C with 30 minutes dwell at temp. extremes and 1 minute transition between temperatures
Dry heat (IEC 60512-11i)	Temperature 70°C, duration 5d
Damp heat cyclic (IEC 60068-2-38)	25°C to 65°C; cold sub-cycle - 10°C; humidity 93 % RH 25 cycles, 1 cycle/24 h
Cold (IEC 60512-11j)	-40°C duration 2h

Flow mixed gas test (IEC 60068-2-60)	Duration 4 d, Method 4 (mated and unmated)
Corrosion salt mist	Exposed at 5 % salt water, 35 ± 2°C, duration 48 h (left under unmated condition.)
Vibration Sinusoidal (IEC 60512-test 6d)	10 - 500 Hz; 0.35 mm; 49 m/s2 / 2 h / 3 axis / No contact disturbances ≥ 1 µs
Mechanical shock (IEC 60512-test 6c)	Half sine shock 300 m/s², duration 11 ms / 3 shocks / both directions / 3 axis - totally 18 shocks / No contact disturbances ≥ 1 µ
Mechanical shock (DIN EN 61373 Class 1 cat b) / Additional test to fulfill DIN EN 50155 for railway equipment	Half sine shock 5 g, duration 30 ms / 5 shocks / both directions / 3 axis - totally 30 shocks / No contact disturbances ≥ 1 µs
Random vibration	Class 1 cat b
(DIN EN 61373 Class 1 cat b)	5,72 m/s²
Additional test to fulfill DIN EN 50155	No contact disturbances ≥ 1 µs
for railway equipment	

Mounting specification

Recommended panel cut out

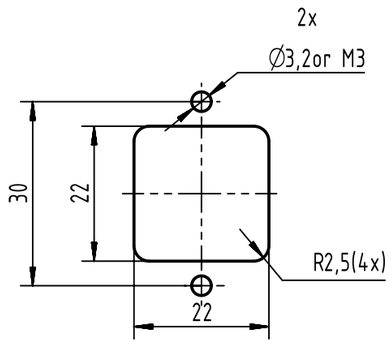

Maximal panel thickness	9 mm
Material specification	
Housing material	Depending on type zinc die cast or plastic
Isolator material	
Material	Isolation body PA / Plug hood PC
Color	Depending on type black or gray
UL classification	UL94 V-0
Contact RJ45	
Contact material	Copper alloy (0.3mm thickness alloy C5210)
Plating contact area	Gold plating (15 µm) over Ni (min. 1,27 µm)
Plating solder area	Tin plating over Ni (min. 1,27 µm)
Shielding shells	
Material	Copper alloy
Plating	Nickel plated

All Dimensions in mm
Original Size DIN A3

Scale 1:1	Free size tol.		Ref. Sub. DS 21 03 520 10 01 / EC04876 / 13.04.2010	
Created by DRAGHICI	Inspected by AVRAM	Standardisation HOFFMANN	Date 2017-05-03	State Final Release
Title Han® 3A RJ45 Hybrid Cat6				Doc-Key / ECM-Nr. 100637182/UGD/000/A 500000109451
Type DS	Number 09452251760		Rev. A	Page 2/3

All rights reserved

Department EC PD - RO

HARTING Electronics GmbH
D-32339 Espelkamp

A3

Han® 3A RJ45 Hybrid Cat6

RoHS compliant

Contact Power	
Contact material	K55 R650
Plating	
	nickel plating: 0.5 + 0.5 µm
	silver plating: 5 + 2µm on contact side
	tin lead plating 5+3µm on SMT termination side
Isolating body	VECTRA E 130ID-2

RJ45 mating face acc.
to IEC 60603-7

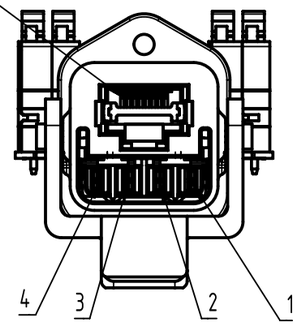

Loading-Plan
4x 16A/48V

1 — 1
2 — 2
3 — 3
4 — 4

Loading-Plan
RJ 45

1 — 1
2 — 2
3 — 3
4 — 4
5 — 5
6 — 6
7 — 7
8 — 8

Pin No. ix	10BASE-T 100BASE-TX	1/10GBASE-T	EIA/TIA 568A	EIA/TIA 568B	Industrial (PROFINET)
1	**TX+**	BI_DA+	white/green	white/orange	yellow
2	**TX-**	BI_DA-	green	orange	orange
3	N.C	GND	--	--	--
4	N.C	BI_DC+	blue	blue	--
5	N.C	BI_DC-	white/blue	white/blue	--
6	**RX+**	BI_DB+	white/orange	white/green	white
7	**RX-**	BI_DB-	orange	green	blue
8	N.C	GND	--	--	--
9	N.C	BI_DD+	white/brown	white/brown	--
10	N.C	BI_DD-	brown	brown	--

All Dimensions in mm
Original Size DIN A3

Scale 1:1	Free size tol.			Ref. Sub. DS 21 03 520 10 01 / EC04876 / 13.04.2010
Created by DRAGHICI	Inspected by AVRAM	Standardisation HOFFMANN	Date 2017-05-03	State Final Release
Title Han® 3A RJ45 Hybrid Cat6				Doc-Key / ECM-Nr. 100637182/UGD/000/A 500000109451
Type DS	Number 09452251760		Rev. A	Page 3/3

All rights reserved

Department EC PD - RO

HARTING Electronics GmbH
D-32339 Espelkamp

A3