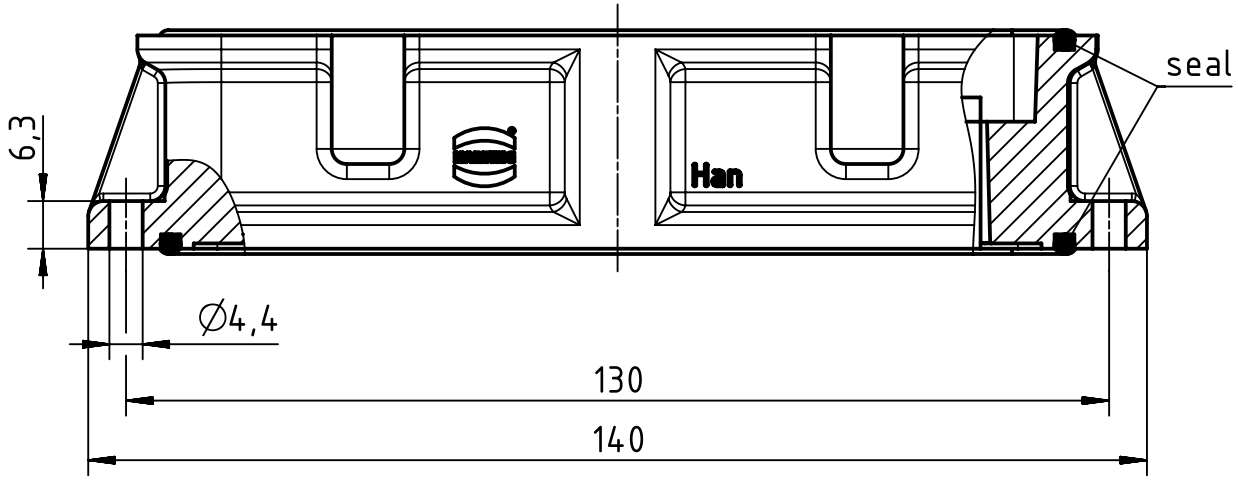

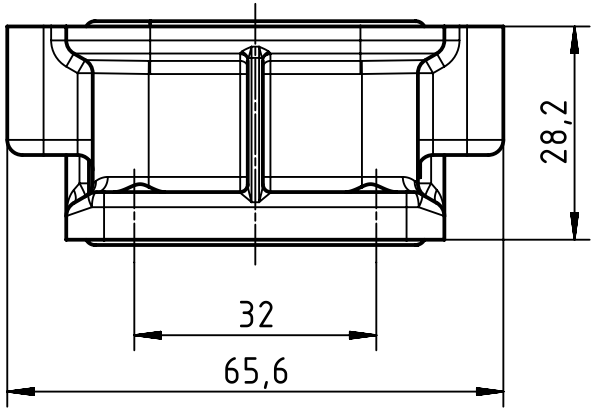

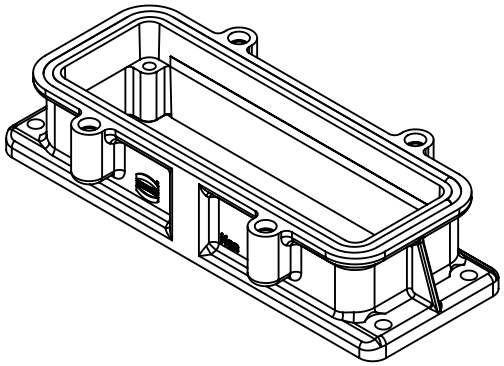

(1:2)

panel cut out

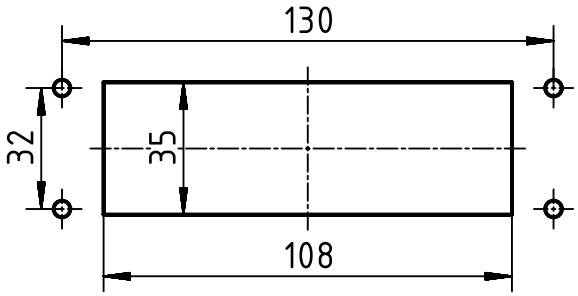

All Dimensions in mm Original Size DIN A4	Scale 1:1	Free size tol.		Ref. Sub. TB 09 62 064 0301 v. 17.08.10	
All rights reserved Department EL PD	Created by SPREENB	Inspected by GERB	Standardisation RUETERA	Date 2018-11-23	State Final Release
HARTING Electric GmbH & Co. KG D-32339 Espelkamp	Title Han EMC 64 Base Panel				Doc-Key / ECM-Nr. 100195457/UGD/004/B 500000143545
	Type TB	Number 09 62 064 0301		Rev. B	Page 1/1

A4