DOWNLOADED FROM WWW.SCATTS.CO.UK

Capacitive sensor
BC20-K40SR-VP4X2 W/M16X1.5

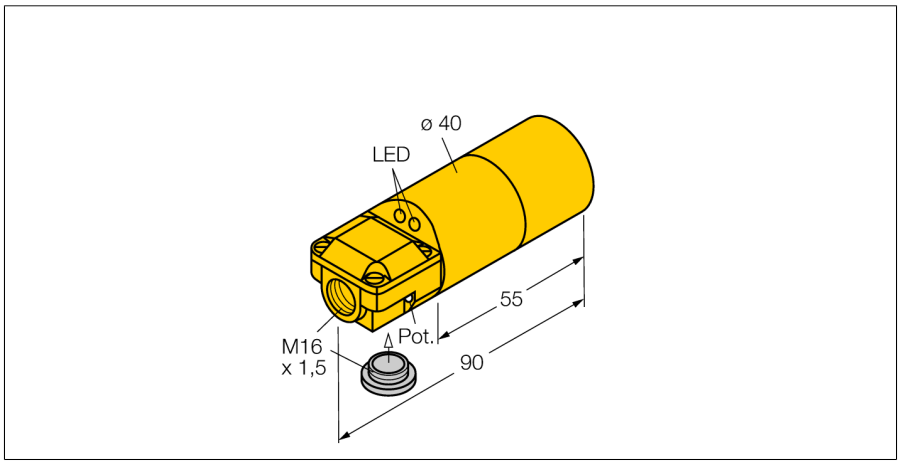

- **2 cable entries (axial, radial)**
- **Smooth barrel, Ø 40 mm**
- **Plastic, ABS**
- **Fine adjustment via potentiometer**
- **DC 4-wire, 10…65 VDC**
- **Complementary contact, PNP output**
- **Terminal chamber**

Wiring Diagram

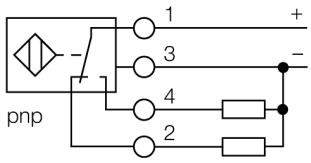

Functional principle

Capacitive proximity switches are designed for non-contact and wear-free detection of electrically conductive as well as non-conductive metal objects.

Type designation	BC20-K40SR-VP4X2 W/M16X1.5
Ident-No.	25100
Ident-No (TUSA)	M2510000
Rated switching distance (flush)	20 mm
Rated switching distance (non-flush)	30 mm
Secured operating distance	≤ (0.72 x Sn) mm
Hysteresis	2…20 %
Temperature drift	type 20 %
Repeat accuracy	≤ 2 % of full scale
Ambient temperature	-25…+70 °C
Operating voltage	10…65 VDC
Residual ripple	≤ 10 % U_{ss}
DC rated operational current	≤ 200 mA
No-load current I_0	≤ 15 mA
Residual current	≤ 0.1 mA
Switching frequency	0.1 kHz
Isolation test voltage	≤ 0.5 kV
Output function	4-wire, Complementary contact, PNP
Short-circuit protection	yes/ Cyclic
Voltage drop at I_e	≤ 1.8 V
Wire breakage/Reverse polarity protection	yes/ Complete
Approvals	UL
Design	Smooth barrel,40 mm
Dimensions	90 mm
Housing material	Plastic, ABS
Active area material	Plastic, ABS
Electrical connection	Terminal chamber
Clamping ability	≤ 2.5 mm^2
Vibration resistance	55 Hz (1 mm)
Shock resistance	30 g (11 ms)
Protection class	IP67
MTTF	1080 years acc. to SN 29500 (Ed. 99) 40 °C
Packaging unit	1
Power-on indication	LED,Green
Switching state	LED, Yellow
Included in delivery	BS40, cable gland, blanking plug

Edition • Rev. C • 2019-02-08T07:46:18+01:00

 TURCK Inc. ● 3000 Campus Drive Minneapolis, MN 55441-2656 ● Phone: 763-553-7300 ● Application Support: 1-800-544-7769 ● Fax 763-553-0708 ● www.turck.com

DOWNLOADED FROM WWW.SCATTS.CO.UK

DOWNLOADED FROM WWW.SCATTS.CO.UK

Capacitive sensor
BC20-K40SR-VP4X2 W/M16X1.5

Mounting instructions/Description	minimum distances
Distance D	40 mm
Distance W	60 mm
Distance S	60 mm
Distance G	120 mm

Diameter active area B	Ø 40 mm

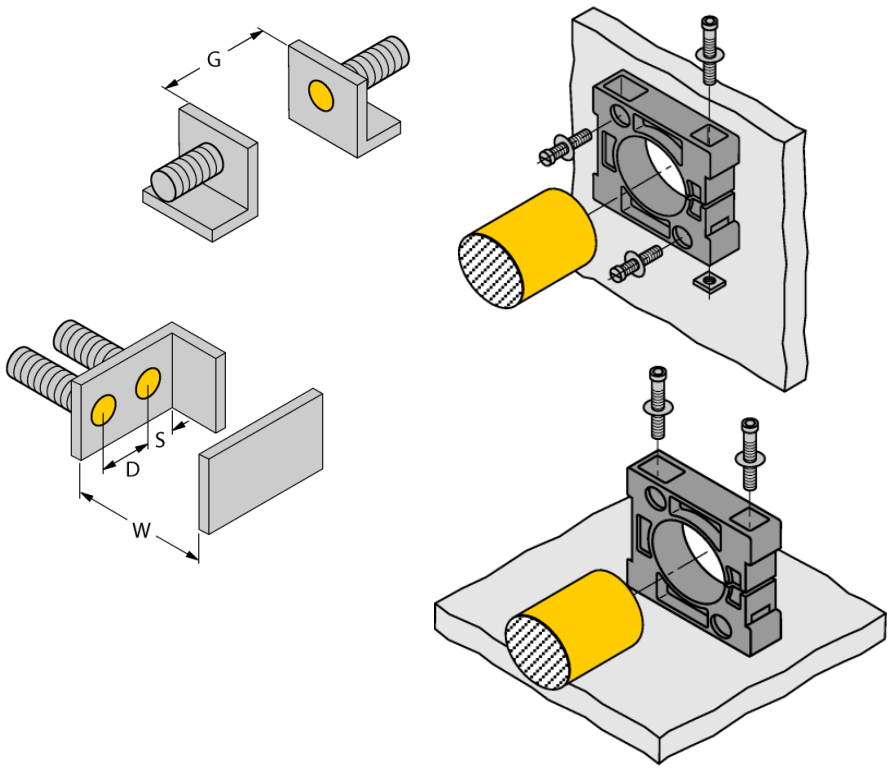

The given minimum distances have been checked in compliance with the standard switching distance. Should the sensitivity of the sensors be changed via potentiometer, the data sheet specifications no longer apply.

Edition • Rev. C • 2019-02-08T07:46:18+01:00

 TURCK Inc. ● 3000 Campus Drive Minneapolis, MN 55441-2656 ● Phone: 763-553-7300 ● Application Support: 1-800-544-7769 ● Fax 763-553-0708 ● www.turck.com

DOWNLOADED FROM WWW.SCATTS.CO.UK

DOWNLOADED FROM WWW.SCATTS.CO.UK

Capacitive sensor
BC20-K40SR-VP4X2 W/M16X1.5

Accessories

Type code	Ident-No.	Description	
MAP-K40	6950014	Mounting adapter; material: Polypropylene; sensor replacement with filled container possible (adapter remains in container during sensor replacement)	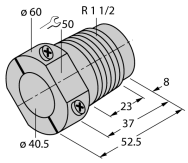
BS-40	69466	Fixing clamp; material mounting block: PBT	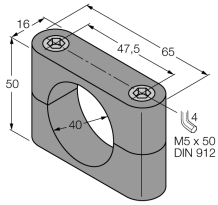

Edition • Rev. C • 2019-02-08T07:46:18+01:00

 TURCK Inc. ● 3000 Campus Drive Minneapolis, MN 55441-2656 ● Phone: 763-553-7300 ● Application Support: 1-800-544-7769 ● Fax 763-553-0708 ● www.turck.com

DOWNLOADED FROM WWW.SCATTS.CO.UK

SCATTERGOOD & JOHNSON LTD
ELECTRICAL ENGINEERING & FLUID CONTROL DISTRIBUTORS
Est.1899

At Scattergood & Johnson Ltd, we pride ourselves on being a technical distributor to specialist industries.

Working with a range of quality product suppliers across a number of specialist markets, we are not your average 'box shifter' - we are your technical and supply chain partner.

We fully support every product we sell - for free! Our internal team and external sales engineers can answer any product or application question, no matter the complexity.

Backing up this technical ability is a range of 50,000+ products available from stock for nationwide next day delivery (same day if required!), or you can collect what you need from any of our trade counters around the UK.

Select your specialist interest below to learn more about how we can help.

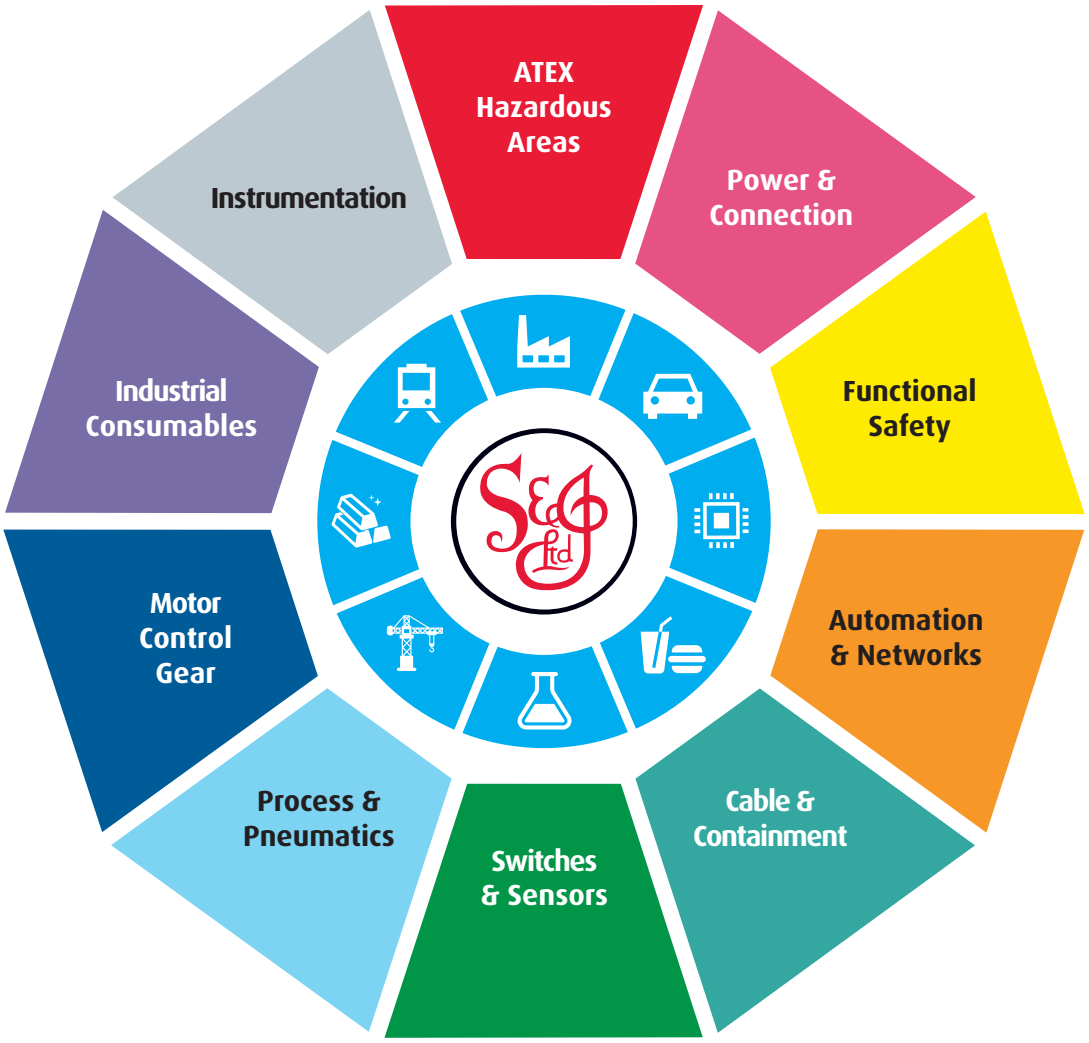

Online, In Branch and On the Road - Scattergood & Johnson Ltd, there when you need us.

www.scatts.co.uk