DOWNLOADED FROM WWW.SCATTS.CO.UK

CEAG

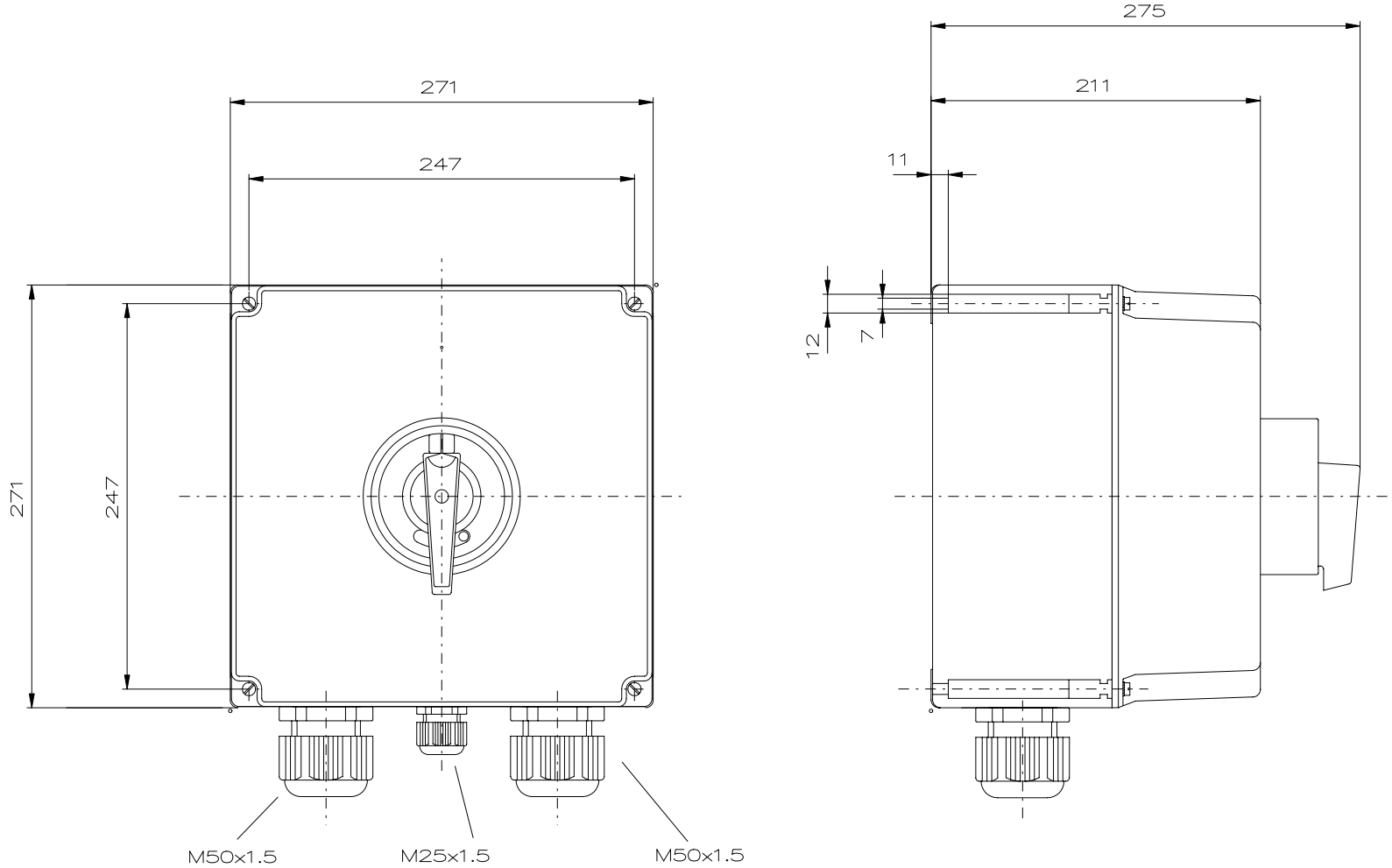

"Schutzvermerk nach DIN 34 beachten" / "Copyright reseved"

Designed with CAD-System ESP32

Description:	Ex–Safety switch (Ex–ed IIC design) 80 A 3–pole
Beschreibung:	Ex–Sicherheitsschalter (Ex–ed IIC) 80 A 3–polig

COOPER Crouse-Hinds

Rev.st/ Zust.	Revision/ Änderung	Date/ Datum	Name/ Name

Date/ Datum	30.10.2008	Material-No.:/ Material-Nr.:	
Expert/ Bearbeiter	Röther		
1:3	Dimension unit: mm Maßeinheit: mm	GHG2640020R0001	

22

DOWNLOADED FROM WWW.SCATTS.CO.UK

SCATTERGOOD & JOHNSON LTD
ELECTRICAL ENGINEERING & FLUID CONTROL DISTRIBUTORS
Est.1899

At Scattergood & Johnson Ltd, we pride ourselves on being a technical distributor to specialist industries.

Working with a range of quality product suppliers across a number of specialist markets, we are not your average 'box shifter' - we are your technical and supply chain partner.

We fully support every product we sell - for free! Our internal team and external sales engineers can answer any product or application question, no matter the complexity.

Backing up this technical ability is a range of 50,000+ products available from stock for nationwide next day delivery (same day if required!), or you can collect what you need from any of our trade counters around the UK.

Select your specialist interest below to learn more about how we can help.

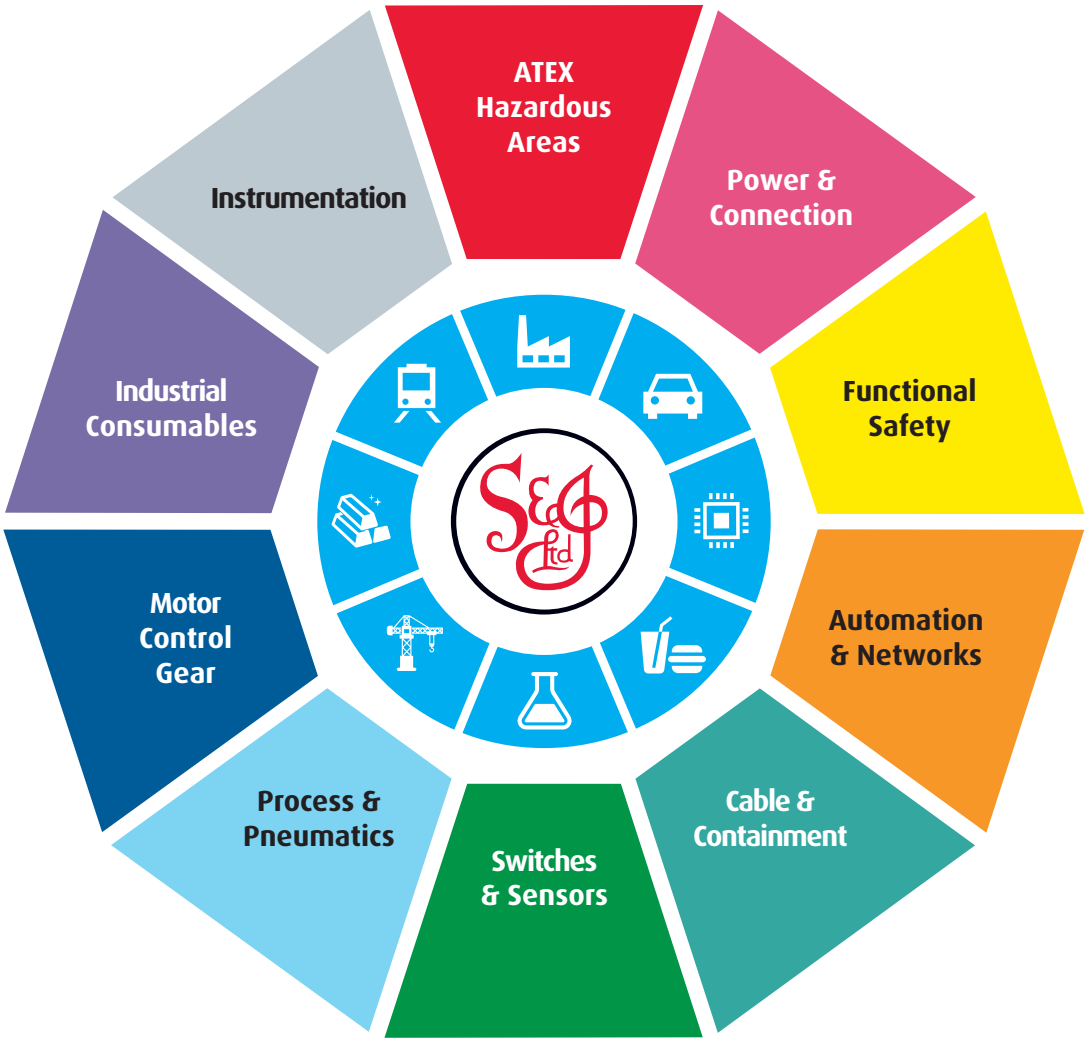

Online, In Branch and On the Road - Scattergood & Johnson Ltd, there when you need us.

www.scatts.co.uk