DOWNLOADED FROM WWW.SCATTS.CO.UK

FS-200E 2.0 - 30 (l/min) with pre-adjusted set points
FS-200E-A 3.0 - 57 (l/min) adjustable set points

The FS-200E flow switch offers accurate flow detection with 1% repeatability and European G1" port size. The durable construction delivers long life repeatability in either water or oil. The design of large flow paths keep pressure drop low, thus are ideal for detection of flow in high volume lubrication, cooling or process applications.

The FS-200E Adjustable versions offer the same accuracy with the additional feature of external adjustment.

Adjustment vane on FS-200E-A

Specifications

(all data related to water at +20°C)

Max. flow	85 l/min
Max. operating pressure	27 bar
Proof pressure	45 bar
Temperature range	- 20 °C to +80 °C (cable, plug connector) - 20 °C to +150 °C (terminal box)
Set points	see order number
Switching function (related to increasing flow)	SPDT
Factory calibration position	horizontal, electrical connection up
Mounting orientation	any position
Repeatability	± 1%
Adjustment accuracy	±10%
Hysteresis	max. 15%
Mounting	G1"
Electrical connections	- cable: PVC, 3 x 0.34 mm2 (length: approx. 1 m) - plug connector per DIN 43650 - terminal box
Enclosure	- IP65
Electrical data contact rating	20 VA, 0.5 A, 250 V~
Weight	approx. 1.2 kg

Dimensions (in mm)

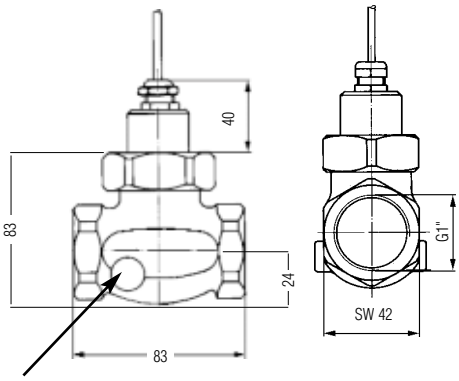

Housing:	Bronze
Disc	Stainless Steel
Spring:	Stainless Steel
O-Ring	Viton®
Magnet	PTFE/Ceramic

How to Order

Order numbers for FS-200E

Set points (l/min)	Cable	Terminal box	Plug connector
2.0	020-2393	020-2401	020-3481
4.0	020-2394	020-2402	020-3482
7.5	020-2395	020-2403	020-3483
11.5	020-2396	020-2404	020-3484
15.0	020-2397	020-2405	020-3485
19.0	020-2398	020-2406	020-3486
22.5	020-2399	020-2407	020-3487
30.0	020-2400	020-2408	020-3488

Order numbers for FS-200E-A

Set points (l/min)	Cable	Terminal box	Plug connector
3.0 ... 22.5	020-2413	**020-2416**	020-3489
7.5 ... 30.0	020-2415	020-2418	020-3491
19.0 ... 57.0	020-2414	**020-2417**	020-3490

Terminal Box

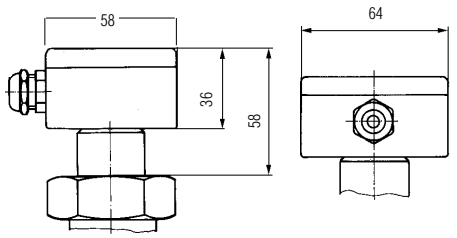

Plug Connector

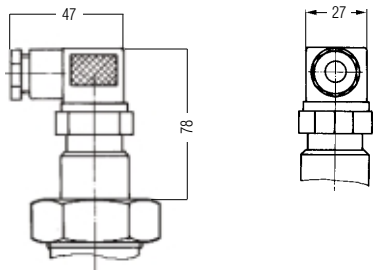

Pressure Drop Diagram

(at min. set point adjustment)

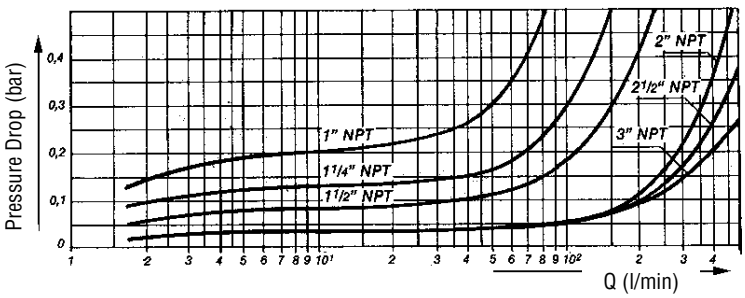

Wiring Diagram

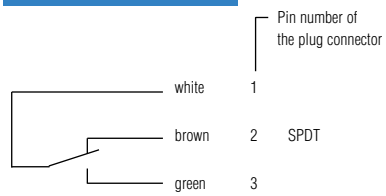

Standard Products in **bold**

DOWNLOADED FROM WWW.SCATTS.CO.UK

FLOW SWITCHES

www.gems-sensors.co.uk

SCATTERGOOD & JOHNSON LTD
ELECTRICAL ENGINEERING & FLUID CONTROL DISTRIBUTORS
Est.1899

At Scattergood & Johnson Ltd, we pride ourselves on being a technical distributor to specialist industries.

Working with a range of quality product suppliers across a number of specialist markets, we are not your average 'box shifter' - we are your technical and supply chain partner.

We fully support every product we sell - for free! Our internal team and external sales engineers can answer any product or application question, no matter the complexity.

Backing up this technical ability is a range of 50,000+ products available from stock for nationwide next day delivery (same day if required!), or you can collect what you need from any of our trade counters around the UK.

Select your specialist interest below to learn more about how we can help.

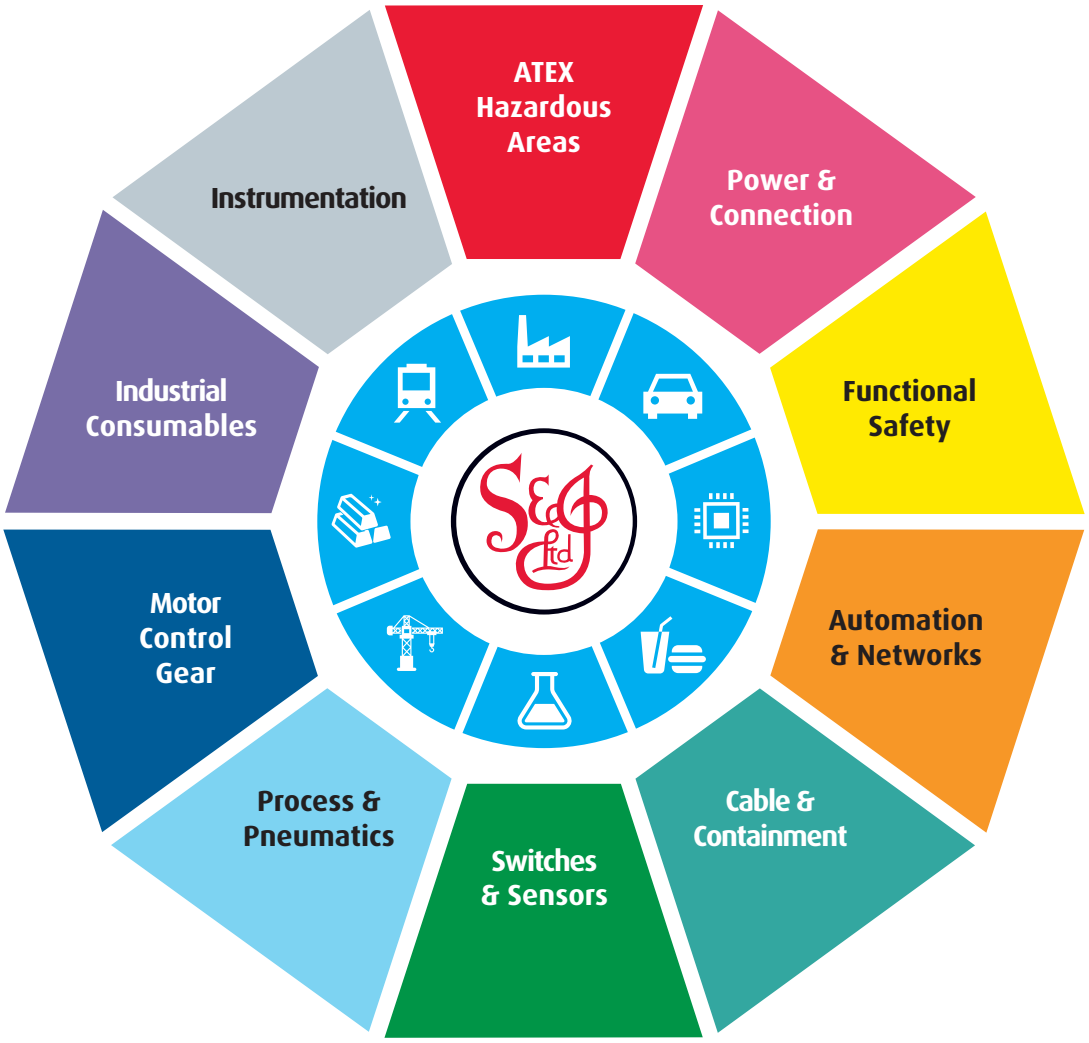

Online, In Branch and On the Road - Scattergood & Johnson Ltd, there when you need us.

www.scatts.co.uk