NX-series Digital I/O Unit

NX-ID/IA/OD/OC/MD

CSM_NX-ID_IA_OD_OC_MD_DS_E_3_5

A wide range of digital I/O units from general purpose use to high-speed synchronous control

- I/O modules on the NX CPU Unit or EtherCAT® Coupler Unit
- Connect to the NJ/NX/NY Controller via EtherCAT

Features

- High-speed I/O refreshing using the EtherCAT coupler
- I/O refreshing synchronized with the control cycle of the controller (synchronous refreshing)
- Time-stamp inputs and outputs anywhere in the EtherCAT network can be independently controlled with sub-microsecond accuracy
- Detachable terminals for easy maintenance
- Screwless Push-In Plus terminal block or MIL/Fujitsu connector speeds up installation
- Compact with a width of 12 mm per unit (connector type: 30 mm)
- 4, 8, 16 or 32 inputs for flexible I/O configuration (NX-ID/IA)
- 2, 4, 8, 16 or 32 outputs for flexible I/O configuration (NX-OD/OC)
- Connect to the CJ PLC using the EtherNet/IP™ bus coupler

Sysmac is a trademark or registered trademark of OMRON Corporation in Japan and other countries for OMRON factory automation products.
EtherCAT® is a registered trademark and patented technology, licensed by Beckhoff Automation GmbH, Germany.
EtherNet/IP™ is a trademark of ODVA.
Other company names and product names in this document are the trademarks or registered trademarks of their respective companies.

System Configurations

Connected to a CPU Unit

The following figure shows a system configuration when NX Units are connected to an NX-series CPU Unit.

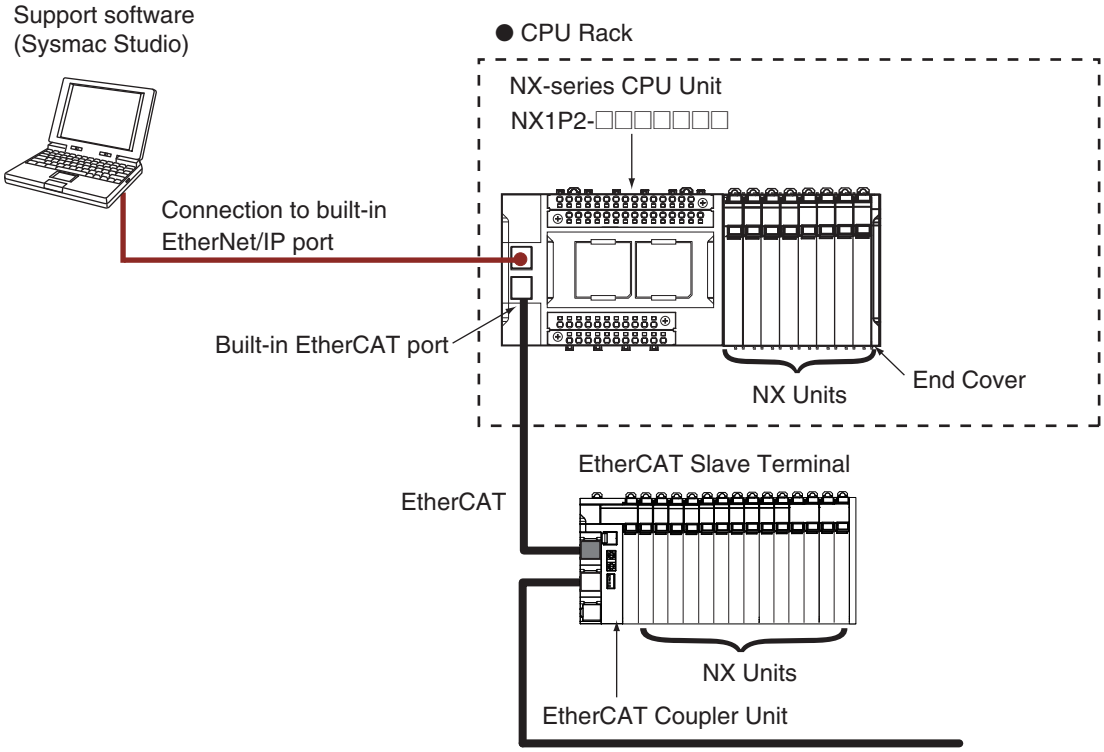

Note: For whether an NX Unit can be connected to the CPU Unit, refer to the version information.

Connected to an EtherCAT Coupler Unit

The following figure shows an example of the system configuration when an EtherCAT Coupler Unit is used as a Communications Coupler Unit.

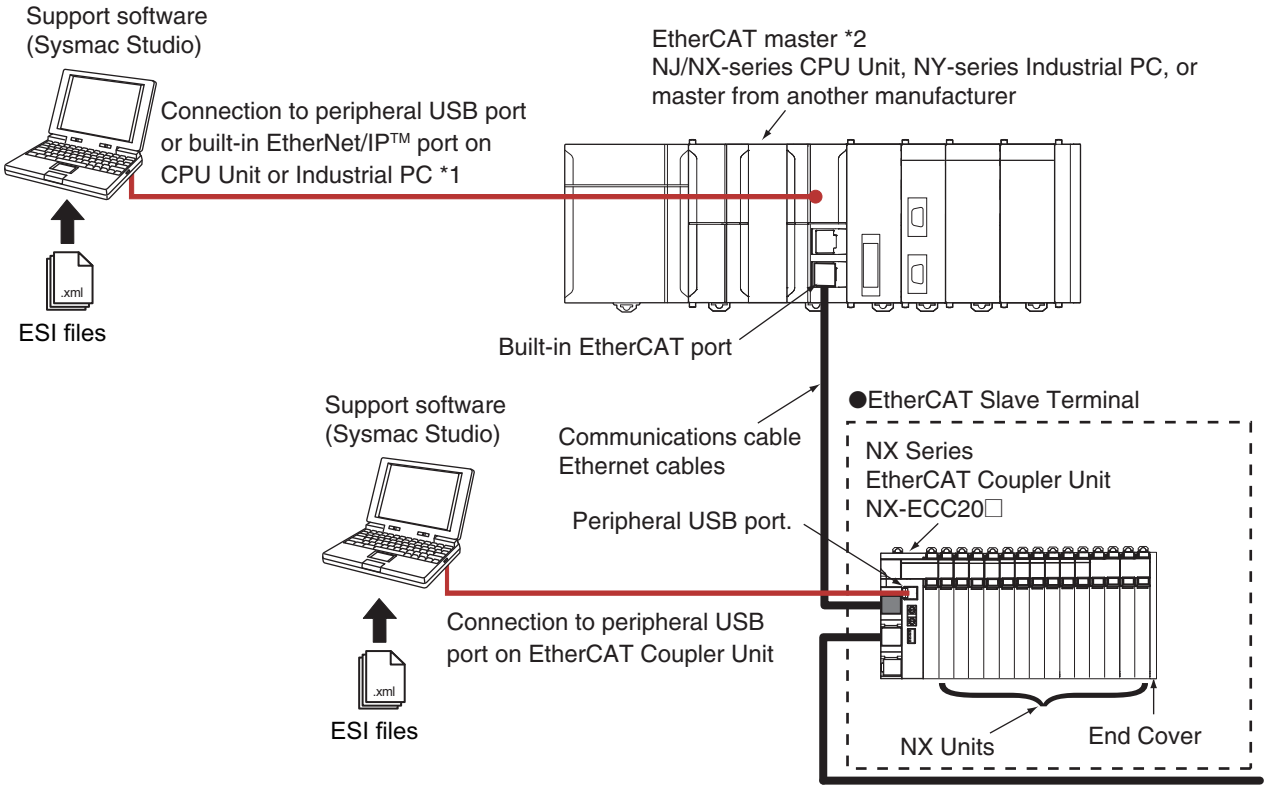

*1. The connection method for the Sysmac Studio depends on the model of the CPU Unit or Industrial PC.
*2. An EtherCAT Slave Terminal cannot be connected to any of the OMRON CJ1W-NC□81/□82 Position Control Units even though they can operate as EtherCAT masters.

Note: For whether an NX Unit can be connected to the Communications Coupler Unit, refer to the version information.

System Configuration in the Case of a Communication Control Unit

The following figure shows a system configuration when a group of NX Units is connected to an NX-series Communication Control Unit. To configure a Safety Network Controller, mount the Safety CPU Unit, which is one of the NX Units, to the CPU Rack of the Communication Control Unit.
You cannot connect a Communication Control Unit with Digital I/O Units that support input refreshing with input changed time or output refreshing with specified time stamp.

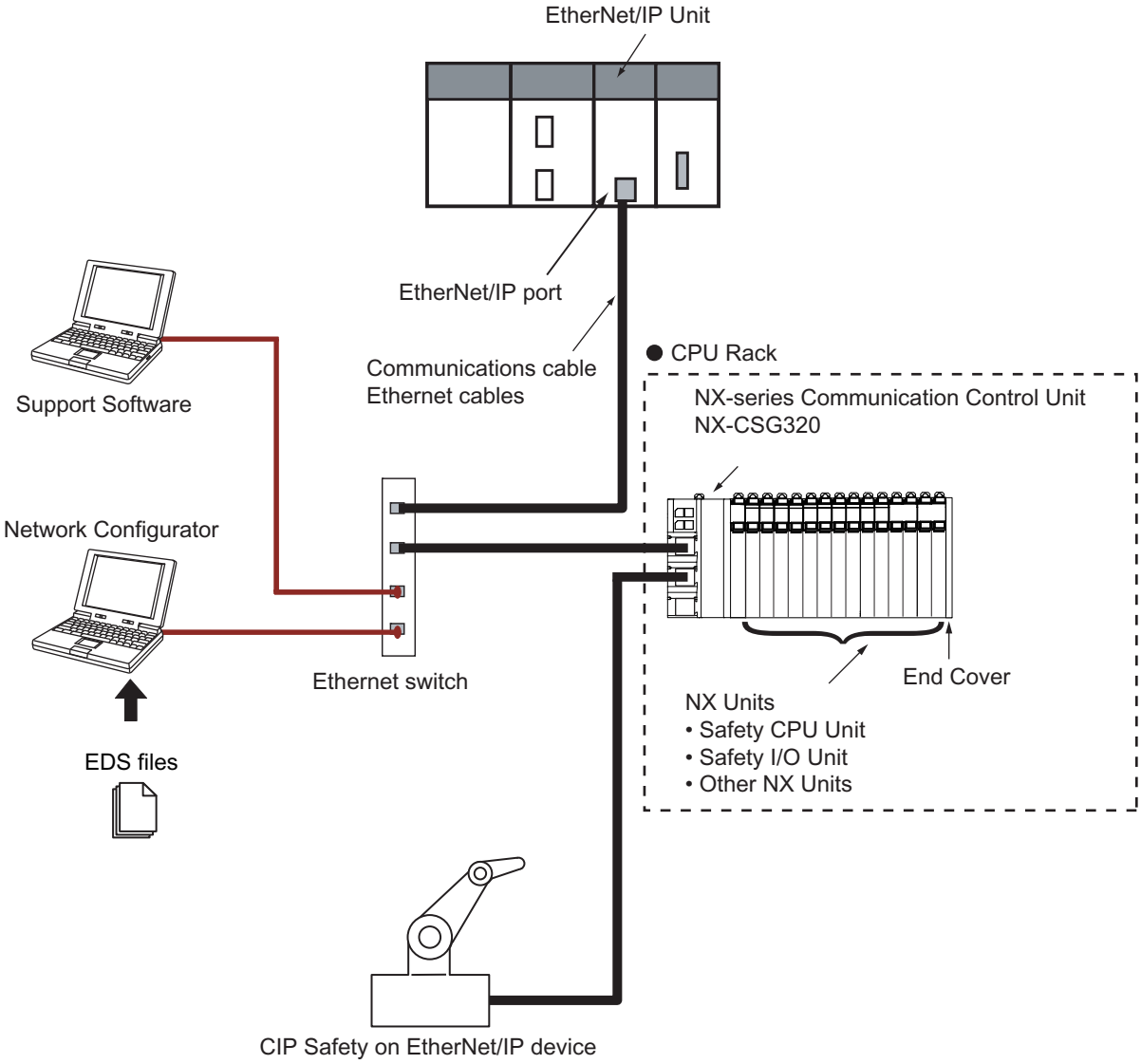

Note: For whether an NX Unit can be connected to the Communication Control Unit, refer to the version information.

Model Number Structure

NX-□□□□□□-□
(1) (2) (3) (4) (5)

(1) Unit type

No.	Specification
ID	DC input
IA	AC input
OD	Transistor output
OC	Relay output
MD	DC input/Transistor output

(2) Number of points

No.	Specification
2	2 points
3	4 points
4	8 points
5	16 points
6	32 points, or 16 points each for inputs and outputs

(3) I/O type

No.	Inputs	Outputs	Mixed I/O (Input, Output)
1	For both NPN/PNP	NPN	For both NPN/PNP, NPN
2	---	PNP	For both NPN/PNP, PNP
3	NPN	---	---
4	PNP	---	---
6	---	N.O.	---
7	---	N.O.+N.C.	---

(5) External connection terminals

No.	Specification
None	Screwless clamping terminal block
-1	M3 screw terminal block
-5	MIL connector
-6	Fujitsu connector

(4) Other specifications
Digital Input Units

No.	Input voltage	ON/OFF response time		I/O refreshing method	
		Exceeds 1 µs	1 µs max.	Free-Run refreshing *1 only or Switching Synchronous I/O refreshing *2 and Free-Run refreshing	Input refreshing with input changed time only
17	12 to 24 VDC or 240 VAC	Yes	---	Yes	---
42	24 VDC	Yes	---	Yes	---
43		---	Yes	Yes	---
44		---	Yes	---	Yes

*1 Free-Run refreshing
*2 Synchronous I/O refreshing

Digital Output Units

No.	Rated voltage	Load current	ON/OFF response time		I/O refreshing method		Other functions
			Exceeds 1 µs	1 µs max.	Free-Run refreshing *1 only or Switching Synchronous I/O refreshing *2 and Free-Run refreshing	Output refreshing with specified time stamp only	Load short-circuit protection
21	12 to 24 VDC or 240 VAC	0.5 A	Yes	---	Yes	---	---
33		2 A	Yes	---	Yes	---	---
53	24 VDC	0.5 A	---	Yes	Yes	---	---
54			---	Yes	---	Yes	---
56			Yes	---	Yes	---	Yes
57			---	Yes	Yes	---	Yes
58			---	Yes	---	Yes	Yes
68		2 A	Yes	---	Yes	---	Yes

*1 Free-Run refreshing
*2 Synchronous I/O refreshing

Digital Mixed I/O Units

No.	Input section	Output section					
	Rated input voltage	Rated voltage	Load current	ON/OFF response time		I/O refreshing method	Other functions
				Exceeds 1 µs	1 µs max.		Load short-circuit protection
21	24 VDC	12 to24 VDC	0.5 A	Yes	---	Switching Synchronous I/O refreshing and Free-Run refreshing	Yes
56		24 VDC		Yes	---		---

Ordering Information

Applicable standards

Refer to the OMRON website (www.ia.omron.com) or ask your OMRON representative for the most recent applicable standards for each model.

Digital Input Units

Product Name	Specifications					Model
	Number of points	Internal I/O common	Rated input voltage	I/O refreshing method	ON/OFF response time	
DC Input Unit **(Screwless Clamping Terminal Block, 12 mm Width)**	4 points	NPN	12 to 24 VDC	Switching Synchronous I/O refreshing and Free-Run refreshing	20 µs max./400 µs max.	**NX-ID3317**
			24 VDC		100 ns max./100 ns max.	**NX-ID3343**
				Input refreshing with input changed time only *1		**NX-ID3344**
		PNP	12 to 24 VDC	Switching Synchronous I/O refreshing and Free-Run refreshing	20 µs max./400 µs max.	**NX-ID3417**
			24 VDC		100 ns max./100 ns max.	**NX-ID3443**
				Input refreshing with input changed time only *1		**NX-ID3444**
	8 points	NPN		Switching Synchronous I/O refreshing and Free-Run refreshing	20 µs max./400 µs max.	**NX-ID4342**
		PNP				**NX-ID4442**
	16 points	NPN				**NX-ID5342**
		PNP				**NX-ID5442**
DC Input Unit **(M3 Screw Terminal Block, 30 mm Width)**	16 points	For both NPN/PNP	24 VDC	Switching Synchronous I/O refreshing and Free-Run refreshing	20 µs max./400 µs max.	**NX-ID5142-1**
DC Input Unit **(MIL Connector, 30 mm Width)**	16 points	For both NPN/PNP	24 VDC	Switching Synchronous I/O refreshing and Free-Run refreshing	20 µs max./400 µs max.	**NX-ID5142-5**
	32 points					**NX-ID6142-5**
DC Input Unit **(Fujitsu Connector, 30 mm Width)**	32 points	For both NPN/PNP	24 VDC	Switching Synchronous I/O refreshing and Free-Run refreshing	20 µs max./400 µs max.	**NX-ID6142-6**
AC Input Unit **(Screwless Clamping Terminal Block, 12 mm Width)**	4 points	200 to 240 VAC, 50/60 Hz (170 to 264 VAC, ±3 Hz)		Free-Run refreshing	10 ms max./40 ms max.	**NX-IA3117**

*1. To use input refreshing with input changed time, the EtherCAT Coupler Unit with unit version 1.1 or later and the Sysmac Studio version 1.07 or higher are required.

Digital Output Units

Product Name	Specifications						Model
	Number of points	Internal I/O common	Maximum value of load current	Rated voltage	I/O refreshing method	ON/OFF response time	
Transistor Output Unit **(Screwless Clamping Terminal Block, 12 mm Width)**	2	NPN	0.5 A/point, 1 A/Unit	24 VDC	Output refreshing with specified time stamp only *1	300 ns max./ 300 ns max.	**NX-OD2154**
		PNP					**NX-OD2258**
	4	NPN	0.5 A/point, 2 A/Unit	12 to 24 VDC	Switching Synchronous I/O refreshing and Free- Run refreshing	0.1 ms max./ 0.8 ms max.	**NX-OD3121**
				24 VDC		300 ns max./ 300 ns max.	**NX-OD3153**
		PNP				0.5 ms max./ 1.0 ms max.	**NX-OD3256**
						300 ns max./ 300 ns max.	**NX-OD3257**
			2 A/point, 8 A/Unit			0.5 ms max./ 1.0 ms max.	**NX-OD3268**
	8	NPN	0.5 A/point, 4 A/Unit	12 to 24 VDC		0.1 ms max./ 0.8 ms max.	**NX-OD4121**
		PNP		24 VDC		0.5 ms max./ 1.0 ms max.	**NX-OD4256**
	16	NPN		12 to 24 VDC		0.1 ms max./ 0.8 ms max.	**NX-OD5121**
		PNP		24 VDC		0.5 ms max./ 1.0 ms max.	**NX-OD5256**
Transistor Output Unit **(M3 Screw Terminal Block, 30 mm Width)**	16	NPN	0.5 A/point, 5 A/Unit	12 to 24 VDC	Switching Synchronous I/O refreshing and Free- Run refreshing	0.1 ms max./ 0.8 ms max.	**NX-OD5121-1**
		PNP		24 VDC		0.5 ms max./ 1.0 ms max.	**NX-OD5256-1**
Transistor Output Unit **(MIL Connector, 30 mm Width)**	16	NPN	0.5 A/point, 2 A/Unit	12 to 24 VDC	Switching Synchronous I/O refreshing and Free- Run refreshing	0.1 ms max./ 0.8 ms max.	**NX-OD5121-5**
		PNP		24 VDC		0.5 ms max./ 1.0 ms max.	**NX-OD5256-5**
	32	NPN	0.5 A/point, 2 A/ common, 4 A/Unit	12 to 24 VDC		0.1 ms max./ 0.8 ms max.	**NX-OD6121-5**
		PNP		24 VDC		0.5 ms max./ 1.0 ms max.	**NX-OD6256-5**
Transistor Output Unit **(Fujitsu Connector, 30 mm Width)**	32	NPN	0.5 A/point, 2 A/ common, 4 A/Unit	12 to 24 VDC	Switching Synchronous I/O refreshing and Free- Run refreshing	0.1 ms max./ 0.8 ms max.	**NX-OD6121-6**
Relay Output Unit **(Screwless Clamping Terminal Block, 12 mm Width/24 mm Width)**	2	Relay type: N.O.	250 VAC/2 A (cosϕ=1), 250 VAC/ 2 A (cosϕ=0.4), 24 VDC/2 A, 4 A/Unit		Free-Run refreshing	15 ms max./ 15 ms max.	**NX-OC2633**
		Relay type: N.O.+N.C.					**NX-OC2733**
	8	Relay type: N.O.	250 VAC/2 A (cosϕ=1), 250 VAC/ 2 A (cosϕ=0.4), 24 VDC/2 A, 8 A/Unit		Free-Run refreshing	15 ms max./ 15 ms max.	**NX-OC4633**

*1. To use input refreshing with input changed time, the EtherCAT Coupler Unit with unit version 1.1 or later and the Sysmac Studio version 1.07 or higher are required.

Digital Mixed I/O Units

Product Name	Specifications					Model
	Number of points	Internal I/O common	Maximum value of load current	I/O refreshing method	ON/OFF response time	
DC Input/Transistor Output Unit **(MIL Connector, 30 mm Width)**	Outputs: 16 points Inputs: 16 points	Outputs: NPN Inputs: For both NPN/PNP	Outputs: 12 to 24 VDC Inputs: 24 VDC	Switching Synchronous I/O refreshing and Free-Run refreshing	Outputs: 0.1 ms max./ 0.8 ms max. Inputs: 20 µs max./ 400 µs max.	**NX-MD6121-5**
		Outputs: PNP Inputs: For both NPN/PNP	Outputs: 24 VDC Inputs: 24 VDC		Outputs: 0.5 ms max./ 1.0 ms max. Inputs: 20 µs max./ 400 µs max.	**NX-MD6256-5**
DC Input/Transistor Output Unit **(Fujitsu Connector, 30 mm Width)**	Outputs: 16 points Inputs: 16 points	Outputs: NPN Inputs: For both NPN/PNP	Outputs: 12 to 24 VDC Inputs: 24 VDC	Switching Synchronous I/O refreshing and Free-Run refreshing	Outputs: 0.1 ms max./ 0.8 ms max. Inputs: 20 µs max./ 400 µs max.	**NX-MD6121-6**

Optional Products

Product name	Specification	Model	Standards
Unit/Terminal Block Coding Pins	For 10 Units (Terminal Block: 30 pins, Unit: 30 pins)	**NX-AUX02**	---

Product name	Specification				Model	Standards
	No. of terminals	Terminal number indications	Ground terminal mark	Terminal current capacity		
Terminal Block	8	A/B	None	10 A	**NX-TBA082**	---
	12				**NX-TBA122**	
	16				**NX-TBA162**	

Accessories

Not included.

Connection Patterns for Connector-Terminal Block Conversion Units

Pattern	Configuration	Number of connectors	Branching
A	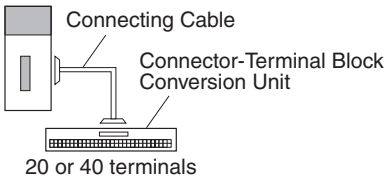	1	None
B	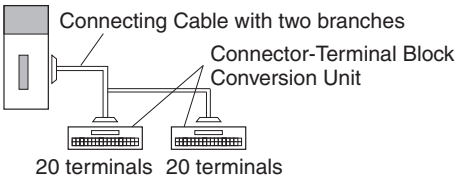		2 branches
C	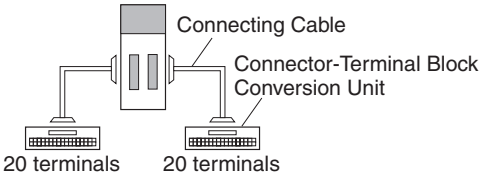	2	None

Connections to Connector-Terminal Block Conversion Units

Unit	I/O capacity	Number of connectors	Polarity	Connection pattern	Connecting Cable *1	Connector-Terminal Block Conversion Unit	Wiring method	Common terminal
NX-ID5142-5	16 inputs	1 MIL connector	NPN/ PNP	A	XW2Z-□□□X	XW2R-□20GD-T	Depends on model *3	None
					XW2Z-□□□X	XW2D-20G6	Phillips screw	None
NX-ID6142-5	32 inputs	1 MIL connector	NPN/ PNP	A	XW2Z-□□□PM	XW2R-□34GD-C2	Depends on model *3	None
				A	XW2Z-□□□K	XW2D-40G6	Phillips screw	None
				B	XW2Z-□□□N	XW2R-□20GD-T (2 Units)	Depends on model *3	None
				B	XW2Z-□□□N	XW2C-20G5-IN16 (2 Units) *2	Phillips screw	Yes
				B	XW2Z-□□□N	XW2C-20G6-IO16 (2 Units)	Phillips screw	Yes
				B	XW2Z-□□□N	XW2D-20G6 (2 Units)	Phillips screw	None
				B	XW2Z-□□□N	XW2E-20G5-IN16 (2 Units) *2	Phillips screw	Yes
NX-ID6142-6	32 inputs	1 Fujitsu connector	NPN/ PNP	A	XW2Z-□□□PF	XW2R-□34GD-C1	Depends on model *3	None
				A	XW2Z-□□□B	XW2D-40G6	Phillips screw	None
				B	XW2Z-□□□D	XW2R-□20GD-T (2 Units)	Depends on model *3	None
				B	XW2Z-□□□D	XW2C-20G5-IN16 (2 Units) *2	Phillips screw	Yes
				B	XW2Z-□□□D	XW2C-20G6-IO16 (2 Units)	Phillips screw	Yes
				B	XW2Z-□□□D	XW2D-20G6 (2 Units)	Phillips screw	None
				B	XW2Z-□□□D	XW2E-20G5-IN16 (2 Units) *2	Phillips screw	Yes
NX-OD5121-5	16 outputs	1 MIL connector	NPN	A	XW2Z-□□□X	XW2R-□20GD-T	Depends on model *3	None
				A	XW2Z-□□□X	XW2D-20G6	Phillips screw	None
NX-OD5256-5	16 outputs	1 MIL connector	PNP	A	XW2Z-□□□X	XW2R-□20GD-T	Depends on model *3	None
				A	XW2Z-□□□X	XW2D-20G6	Phillips screw	None

Unit	I/O capacity	Number of connectors	Polarity	Connection pattern	Connecting Cable *1	Connector-Terminal Block Conversion Unit	Wiring method	Common terminal
NX-OD6121-5	32 inputs	1 MIL connector	NPN	A	XW2Z-□□□PM	XW2R-□34GD-C4	Depends on model *3	None
				A	XW2Z-□□□K	XW2D-40G6	Phillips screw	None
				B	XW2Z-□□□N	XW2R-□20GD-T (2 Units)	Depends on model *3	None
				B	XW2Z-□□□N	XW2C-20G6-IO16 (2 Units)	Phillips screw	Yes
				B	XW2Z-□□□N	XW2D-20G6 (2 Units)	Phillips screw	None
NX-OD6121-6	32 inputs	1 Fujitsu connector	NPN	A	XW2Z-□□□PF	XW2R-□34GD-C3	Depends on model *3	None
				A	XW2Z-□□□B	XW2D-40G6	Phillips screw	None
				B	XW2Z-□□□L	XW2R-□20GD-T (2 Units)	Depends on model *3	None
				B	XW2Z-□□□L	XW2C-20G6-IO16 (2 Units)	Phillips screw	Yes
				B	XW2Z-□□□L	XW2D-20G6 (2 Units)	Phillips screw	None
NX-OD6256-5	32 inputs	1 MIL connector	PNP	A	XW2Z-□□□PM	XW2R-□34GD-C4	Depends on model *3	None
				A	XW2Z-□□□K	XW2D-40G6	Phillips screw	None
				B	XW2Z-□□□N	XW2R-□20GD-T (2 Units)	Depends on model *3	None
				B	XW2Z-□□□N	XW2C-20G6-IO16 (2 Units)	Phillips screw	Yes
				B	XW2Z-□□□N	XW2D-20G6 (2 Units)	Phillips screw	None
NX-MD6121-5	16 outputs	1 MIL connector	NPN/ PNP	C	XW2Z-□□□X	XW2R-□20GD-T	Depends on model *3	None
				C	XW2Z-□□□X	XW2D-20G6	Phillips screw	None
	16 outputs	1 MIL connector	NPN	C	XW2Z-□□□X	XW2R-□20GD-T	Depends on model *3	None
				C	XW2Z-□□□X	XW2D-20G6	Phillips screw	None
NX-MD6121-6	16 outputs	1 Fujitsu connector	NPN/ PNP	C	XW2Z-□□□A	XW2R-□20GD-T	Depends on model *3	None
				C	XW2Z-□□□A	XW2C-20G5-IN16 *2	Phillips screw	Yes
				C	XW2Z-□□□A	XW2C-20G6-IO16	Phillips screw	Yes
				C	XW2Z-□□□A	XW2D-20G6	Phillips screw	None
				C	XW2Z-□□□A	XW2E-20G5-IN16 *2	Phillips screw	Yes
	16 outputs	1 Fujitsu connector	NPN	C	XW2Z-□□□A	XW2R-□20GD-T	Depends on model *3	None
				C	XW2Z-□□□A	XW2C-20G6-IO16	Phillips screw	Yes
				C	XW2Z-□□□A	XW2D-20G6	Phillips screw	None
NX-MD6256-5	16 outputs	1 MIL connector	NPN/ PNP	C	XW2Z-□□□X	XW2R-□20GD-T	Depends on model *3	None
				C	XW2Z-□□□X	XW2D-20G6	Phillips screw	None
	16 outputs	1 MIL connector	PNP	C	XW2Z-□□□X	XW2R-□20GD-T	Depends on model *3	None
				C	XW2Z-□□□X	XW2D-20G6	Phillips screw	None

Note: For other models and specifications that are not listed above, refer to the *XW2R Series Connector-Terminal Block Conversion Units Catalog* (Cat. No. G077) and *XW2R Datasheets*.

✻1 □□□ in the model number indicates the cable length. Refer to the *XW2Z Datasheet* for details.

✻2 The inputs are NPN. For PNP inputs, reverse the polarity of the external power supply connections to the power supply terminals on the Connector-Terminal Block Conversion Unit.

✻3 The wiring methods vary depending on the Connector-Terminal Block Conversion Unit. □ in the model number indicates the wiring method.
J = Phillips screw
E = Slotted screw (rise up)
P= Push-in spring

Connection Patterns for I/O Relay Terminals

Pattern	Configuration	Number of connectors	Branching
A	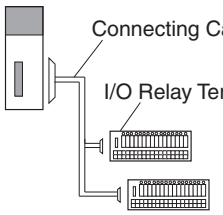	1	2 branches
E	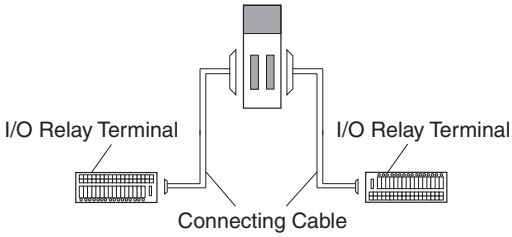	2	None
F	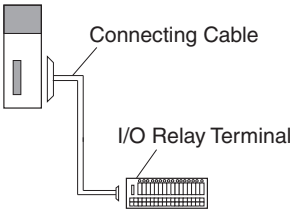	1	

Connections to I/O Relay Terminals

Unit	I/O capacity	Number of connectors	Polarity	Connection pattern	Number of branches	Connecting Cable *1	I/O Relay Terminal	Wiring method
NX-ID5142-5	16 inputs	1 MIL connector	NPN	F	None	XW2Z-RO□C	G7TC-ID16	Phillips screw
				F	None	XW2Z-RO□C	G7TC-IA16	Phillips screw
				F	None	XW2Z-RO□C	G70V-SID16P	Push-in spring
				F	None	XW2Z-RO□C	G70V-SID16P-C16	Push-in spring
			PNP	F	None	XW2Z-RO□C	G70V-SID16P-1	Push-in spring
				F	None	XW2Z-RO□C	G70V-SID16P-1-C16	Push-in spring
NX-ID6142-5	32 inputs	1 MIL connector	NPN	A	2	XW2Z-RO□-□-D1	G7TC-ID16	Phillips screw
				A	2	XW2Z-RO□-□-D1	G7TC-IA16	Phillips screw
				A	2	XW2Z-RO□-□-D1	G70V-SID16P	Push-in spring
				A	2	XW2Z-RO□-□-D1	G70V-SID16P-C16	Push-in spring
			PNP	A	2	XW2Z-RO□-□-D1	G70V-SID16P-1	Push-in spring
				A	2	XW2Z-RO□-□-D1	G70V-SID16P-1-C16	Push-in spring
NX-ID6142-6	32 inputs	1 Fujitsu connector	NPN	A	2	XW2Z-RI□C-□	G7TC-ID16	Phillips screw
				A	2	XW2Z-RI□C-□	G7TC-IA16	Phillips screw
				A	2	XW2Z-RI□C-□	G70V-SID16P	Push-in spring
				A	2	XW2Z-RI□C-□	G70V-SID16P-C16	Push-in spring
			PNP	A	2	XW2Z-RI□C-□	G70V-SID16P-1	Push-in spring
				A	2	XW2Z-RI□C-□	G70V-SID16P-1-C16	Push-in spring
NX-OD5121-5	16 outputs	1 MIL connector	NPN	F	None	XW2Z-RO□C	G7TC-OC08	Phillips screw
				F	None	XW2Z-RO□C	G70D-SOC08	Phillips screw
				F	None	XW2Z-RO□C	G70R-SOC08 *2	Phillips screw
				F	None	XW2Z-RO□C	G7TC-OC16	Phillips screw
				F	None	XW2Z-RO□C	G70D-SOC16	Phillips screw
				F	None	XW2Z-RO□C	G70D-VSOC16	Phillips screw
				F	None	XW2Z-RO□C	G70D-FOM16	Phillips screw
				F	None	XW2Z-RO□C	G70D-VFOM16	Phillips screw
				F	None	XW2Z-RO□C	G70A-ZOC16-3	Phillips screw
				F	None	XW2Z-RO□C	G70V-SOC16P	Push-in spring
				F	None	XW2Z-RO□C	G70V-SOC16P-C4	Push-in spring

Unit	I/O capacity	Number of connectors	Polarity	Connection pattern	Number of branches	Connecting Cable *1	I/O Relay Terminal	Wiring method
NX-OD5256-5	16 outputs	1 MIL connector	PNP	F	None	XW2Z-RI□C	G7TC-OC16-1	Phillips screw
				F	None	XW2Z-RO□C	G70D-SOC16-1	Phillips screw
				F	None	XW2Z-RO□C	G70D-FOM16-1	Phillips screw
				F	None	XW2Z-RO□C	G70A-ZOC16-4	Phillips screw
				F	None	XW2Z-RO□C	G70V-SOC16P-1	Push-in spring
				F	None	XW2Z-RO□C	G70V-SOC16P-1-C4	Push-in spring
NX-OD6121-5	32 outputs	1 MIL connector	NPN	A	2	XW2Z-RO□-□-D1	G7TC-OC16	Phillips screw
				A	2	XW2Z-RO□-□-D1	G7TC-OC08	Phillips screw
				A	2	XW2Z-RO□-□-D1	G70D-SOC16	Phillips screw
				A	2	XW2Z-RO□-□-D1	G70D-FOM16	Phillips screw
				A	2	XW2Z-RO□-□-D1	G70D-VSOC16	Phillips screw
				A	2	XW2Z-RO□-□-D1	G70D-VFOM16	Phillips screw
				A	2	XW2Z-RO□-□-D1	G70A-ZOC16-3 and Relay	Phillips screw
				A	2	XW2Z-RO□-□-D1	G70R-SOC08 *2	Phillips screw
				A	2	XW2Z-RO□-□-D1	G70D-SOC08	Phillips screw
				A	2	XW2Z-RO□-□-D1	G70V-SOC16P	Push-in spring
				A	2	XW2Z-RO□-□-D1	G70V-SOC16P-C4	Push-in spring
NX-OD6121-6	32 outputs	1 Fujitsu connector	NPN	A	2	XW2Z-RO□C-□	G7TC-OC16	Phillips screw
				A	2	XW2Z-RO□C-□	G7TC-OC08	Phillips screw
				A	2	XW2Z-RO□C-□	G70D-SOC16	Phillips screw
				A	2	XW2Z-RO□C-□	G70D-FOM16	Phillips screw
				A	2	XW2Z-RO□C-□	G70D-VSOC16	Phillips screw
				A	2	XW2Z-RO□C-□	G70D-VFOM16	Phillips screw
				A	2	XW2Z-RO□C-□	G70A-ZOC16-3 and Relay	Phillips screw
				A	2	XW2Z-RO□C-□	G70R-SOC08 *2	Phillips screw
				A	2	XW2Z-RO□C-□	G70D-SOC08	Phillips screw
				A	2	XW2Z-RO□C-□	G70V-SOC16P	Push-in spring
				A	2	XW2Z-RO□C-□	G70V-SOC16P-C4	Push-in spring
NX-OD6256-5	32 outputs	1 MIL connector	PNP	A	2	XW2Z-RI□-□-D1	G7TC-OC16-1	Phillips screw
				A	2	XW2Z-RO□-□-D1	G70D-SOC16-1	Phillips screw
				A	2	XW2Z-RO□-□-D1	G70D-FOM16-1	Phillips screw
				A	2	XW2Z-RO□-□-D1	G70A-ZOC16-4 and Relay	Phillips screw
NX-MD6121-5	16 inputs	1 MIL connector	NPN	E	None	XW2Z-RO□C	G7TC-ID16	Phillips screw
				E	None	XW2Z-RO□C	G7TC-IA16	Phillips screw
				E	None	XW2Z-RO□C	G70V-SID16P	Push-in spring
				E	None	XW2Z-RO□C	G70V-SID16P-C16	Push-in spring
	16 outputs	1 MIL connector	NPN	E	None	XW2Z-RO□C	G7TC-OC16	Phillips screw
				E	None	XW2Z-RO□C	G7TC-OC08	Phillips screw
				E	None	XW2Z-RO□C	G70D-SOC16	Phillips screw
				E	None	XW2Z-RO□C	G70D-FOM16	Phillips screw
				E	None	XW2Z-RO□C	G70D-VSOC16	Phillips screw
				E	None	XW2Z-RO□C	G70D-VFOM16	Phillips screw
				E	None	XW2Z-RO□C	G70A-ZOC16-3 and Relay	Phillips screw
				E	None	XW2Z-RO□C	G70R-SOC08 *2	Phillips screw
				E	None	XW2Z-RO□C	G70D-SOC08	Phillips screw
				E	None	XW2Z-RO□C	G70V-SOC16P	Push-in spring
				E	None	XW2Z-RO□C	G70V-SOC16P-C4	Push-in spring

Unit	I/O capacity	Number of connectors	Polarity	Connection pattern	Number of branches	Connecting Cable *1	I/O Relay Terminal	Wiring method
NX-MD6121-6	16 inputs	1 Fujitsu connector	NPN	E	None	XW2Z-R□C	G7TC-ID16	Phillips screw
				E	None	XW2Z-R□C	G7TC-IA16	Phillips screw
				E	None	XW2Z-R□C	G70V-SID16P	Push-in spring
				E	None	XW2Z-R□C	G70V-SID16P-C16	Push-in spring
	16 outputs	1 Fujitsu connector	NPN	E	None	XW2Z-R□C	G7TC-OC16	Phillips screw
				E	None	XW2Z-R□C	G7TC-OC08	Phillips screw
				E	None	XW2Z-R□C	G70D-SOC16	Phillips screw
				E	None	XW2Z-R□C	G70D-FOM16	Phillips screw
				E	None	XW2Z-R□C	G70D-VSOC16	Phillips screw
				E	None	XW2Z-R□C	G70D-VFOM16	Phillips screw
				E	None	XW2Z-R□C	G70A-ZOC16-3 and Relay	Phillips screw
				E	None	XW2Z-R□C	G70R-SOC08 *2	Phillips screw
				E	None	XW2Z-R□C	G70D-SOC08	Phillips screw
				E	None	XW2Z-R□C	G70V-SOC16P	Push-in spring
				E	None	XW2Z-R□C	G70V-SOC16P-C4	Push-in spring
NX-MD6256-5	16 inputs	1 MIL connector	PNP	E	None	XW2Z-RO□C	G70V-SID16P-1	Push-in spring
				E	None	XW2Z-RO□C	G70V-SID16P-1-C16	Push-in spring
	16 outputs	1 MIL connector	PNP	E	None	XW2Z-RO□C	G7TC-OC16-1	Phillips screw
				E	None	XW2Z-RI□C	G70D-SOC16-1	Phillips screw
				E	None	XW2Z-RI□C	G70D-FOM16-1	Phillips screw
				E	None	XW2Z-RI□C	G70A-ZOC16-4 and Relay	Phillips screw
				E	None	XW2Z-RI□C	G70V-SOC16P-1	Push-in spring
				E	None	XW2Z-RI□C	G70V-SOC16P-1-C4	Push-in spring

Note: 1. For other models and specifications that are not listed above, refer to the datasheets.
2. The G70V Series includes models that provide internal connections. Refer to the *G70V Datasheet* (Cat. No. J215) for details.
3. The G70A is a socket only. Mountable relays and timers are sold separately.

*1. □ in the model number indicates the cable length. Refer to the *XW2Z-R Datasheet* (Cat. No. G126) for details.
*2. Product no longer available to order.

General Specifications

Item		Specification
Enclosure		Mounted in a panel
Grounding method		Ground to 100 Ω or less
Operating environment	**Ambient operating temperature**	0 to 55°C
	Ambient operating humidity	10% to 95% (with no condensation or icing)
	Atmosphere	Must be free from corrosive gases.
	Ambient storage temperature	−25 to 70°C (with no condensation or icing)
	Altitude	2,000 m max.
	Pollution degree	2 or less: Meets IEC 61010-2-201.
	Noise immunity	2 kV on power supply line (Conforms to IEC61000-4-4.)
	Overvoltage category	Category II: Meets IEC 61010-2-201.
	EMC immunity level	Zone B
	Vibration resistance *1	Conforms to IEC 60068-2-6. 5 to 8.4 Hz with 3.5-mm amplitude, 8.4 to 150 Hz, acceleration of 9.8 m/s^2, 100 min each in X, Y, and Z directions (10 sweeps of 10 min each = 100 min total)
	Shock resistance *1	Conforms to IEC 60068-2-27. 147 m/s^2, 3 times each in X, Y, and Z directions
Applicable standards *2		cULus: Listed (UL508) or Listed (UL 61010-2-201), ANSI/ISA 12.12.01, EU: EN 61131-2 or EN 61010-2-201, C-Tick or RCM, KC: KC Registration, NK, LR

*1. For the Relay Output Unit, refer to the Digital Input Unit Specifications.
*2. Refer to the OMRON website (http://www.ia.omron.com/) or consult your OMRON representative for the most recent applicable standards for each model.

Digital Input Unit Specifications

● DC Input Unit (Screwless Clamping Terminal Block, 12 mm Width)

NX-ID3317

Unit name	DC Input Unit	**Model**	NX-ID3317
Number of points	4 points	**External connection terminals**	Screwless clamping terminal block (12 terminals)
I/O refreshing method	Selectable Synchronous I/O refreshing or Free-Run refreshing		
Indicators	TS indicator, input indicator 	**Internal I/O common**	NPN
		Rated input voltage	12 to 24 VDC (9 to 28.8 VDC)
		Input current	6 mA typical (at 24 VDC), rated current
		ON voltage/ON current	9 VDC min./3 mA min. (between IOV and each signal)
		OFF voltage/OFF current	2 VDC max./1 mA max. (between IOV and each signal)
		ON/OFF response time	20 µs max./400 µs max.
		Input filter time	Without filter, 0.25 ms, 0.5 ms, 1 ms (factory setting), 2 ms, 4 ms, 8 ms, 16 ms, 32 ms, 64 ms, 128 ms, 256 ms
Dimensions	12 (W) x 100 (H) x 71 (D)	**Isolation method**	Photocoupler isolation
Insulation resistance	20 MΩ min. between isolated circuits (at 100 VDC)	**Dielectric strength**	510 VAC between isolated circuits for 1 minute at a leakage current of 5 mA max.
I/O power supply method	Supply from the NX bus	**Current capacity of I/O power supply terminal**	IOV: 0.1 A/terminal max., IOG: 0.1 A/terminal max.
NX Unit power consumption	• Connected to a CPU Unit or Communication Control Unit 0.90 W max. • Connected to a Communications Coupler Unit 0.50 W max.	**Current consumption from I/O power supply**	No consumption
Weight	65 g max.		
Circuit layout	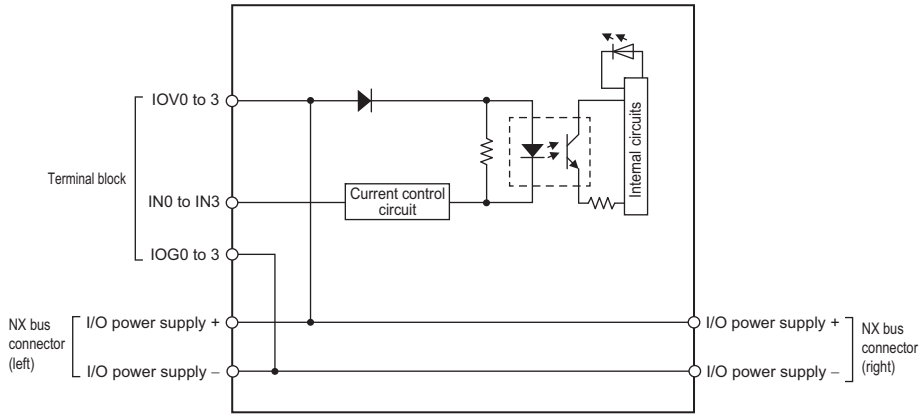 		
Installation orientation and restrictions	Installation orientation: • Connected to a CPU Unit or Communication Control Unit: Possible in upright installation. • Connected to a Communications Coupler Unit: Possible in 6 orientations. Restrictions: No restrictions		
Terminal connection diagram	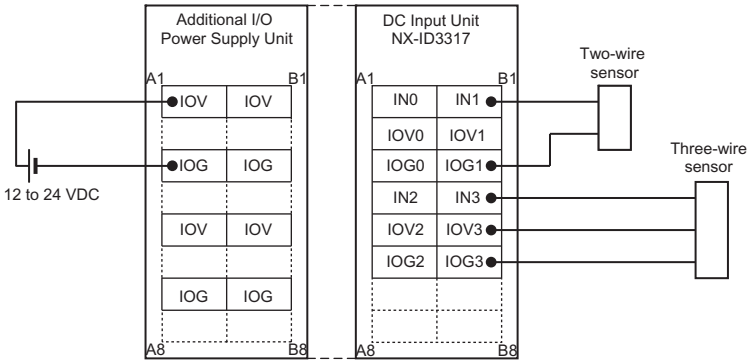 		
Disconnection/ Short-circuit detection	Not supported.	**Protective function**	Not supported.

NX-ID3343

Unit name	DC Input Unit	**Model**	NX-ID3343
Number of points	4 points	**External connection terminals**	Screwless clamping terminal block (12 terminals)
I/O refreshing method	Selectable Synchronous I/O refreshing or Free-Run refreshing		
Indicators	TS indicator, input indicator 	**Internal I/O common**	NPN
		Rated input voltage	24 VDC (15 to 28.8 VDC)
		Input current	3.5 mA typical (at 24 VDC), rated current
		ON voltage/ON current	15 VDC min./3 mA min. (between IOV and each signal)
		OFF voltage/OFF current	5 VDC max./1 mA max. (between IOV and each signal)
		ON/OFF response time	100 ns max./100 ns max.
		Input filter time	Without filter, 1 µs, 2 µs, 4 µs, 8 µs (factory setting), 16 µs, 32 µs, 64 µs, 128 µs, 256 µs
Dimensions	12 (W) x 100 (H) x 71 (D)	**Isolation method**	Digital isolator isolation
Insulation resistance	20 MΩ min. between isolated circuits (at 100 VDC)	**Dielectric strength**	510 VAC between isolated circuits for 1 minute at a leakage current of 5 mA max.
I/O power supply method	Supply from the NX bus	**Current capacity of I/O power supply terminal**	IOV: 0.1 A/terminal max., IOG: 0.1 A/terminal max.
NX Unit power consumption	• Connected to a CPU Unit or Communication Control Unit 0.90 W max. • Connected to a Communications Coupler Unit 0.55 W max.	**Current consumption from I/O power supply**	30 mA max.
Weight	65 g max.		
Circuit layout	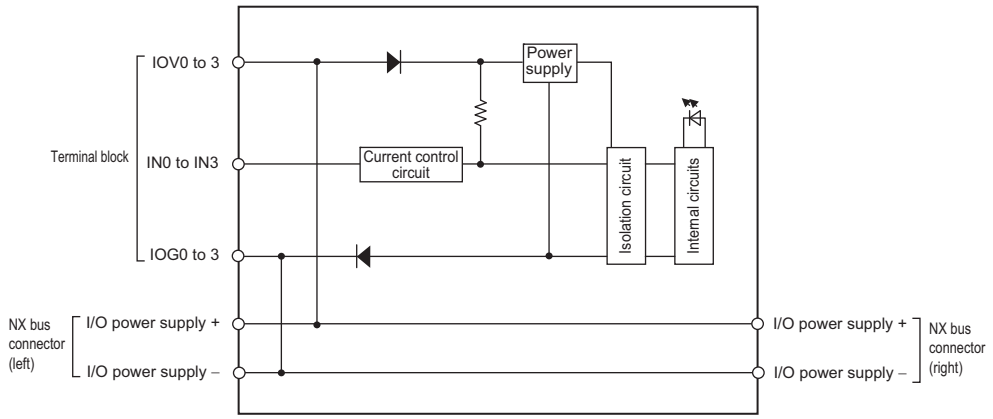 		
Installation orientation and restrictions	Installation orientation: • Connected to a CPU Unit or Communication Control Unit: Possible in upright installation. • Connected to a Communications Coupler Unit: Possible in 6 orientations. Restrictions: No restrictions		
Terminal connection diagram	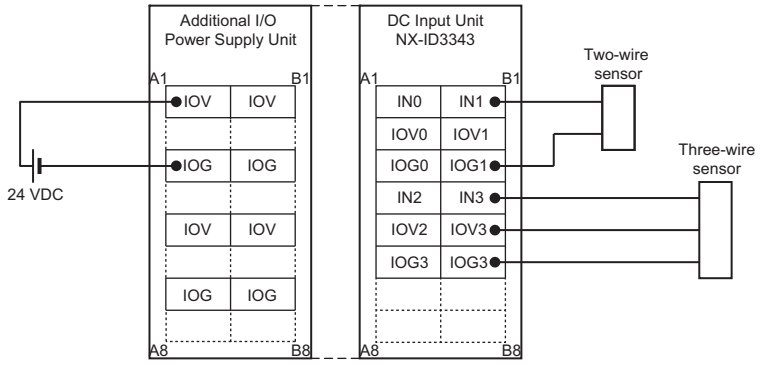 		
Disconnection/ Short-circuit detection	Not supported.	**Protective function**	Not supported.

NX-ID3344

Unit name	DC Input Unit	**Model**	NX-ID3344
Number of points	4 points	**External connection terminals**	Screwless clamping terminal block (12 terminals)
I/O refreshing method	Input refreshing with input changed time		
Indicators	TS indicator, input indicators 	**Internal I/O common**	NPN
		Rated input voltage	24 VDC (15 to 28.8 VDC)
		Input current	3.5 mA typical (at 24 VDC), rated current
		ON voltage/ON current	15 VDC min./3 mA min. (between IOV and each signal)
		OFF voltage/OFF current	5 VDC max./1 mA max. (between IOV and each signal)
		ON/OFF response time	100 ns max./100 ns max.
		Input filter time	No filter *
Dimensions	12 (W) x 100 (H) x 71 (D)	**Isolation method**	Digital isolator isolation
Insulation resistance	20 MΩ min. between isolated circuits (at 100 VDC)	**Dielectric strength**	510 VAC between isolated circuits for 1 minute at a leakage current of 5 mA max.
I/O power supply method	Supply from the NX bus	**Current capacity of I/O power supply terminal**	IOV: 0.1 A/terminal max., IOG: 0.1 A/terminal max.
NX Unit power consumption	• Connected to a CPU Unit 0.90 W max. • Connected to a Communications Coupler Unit 0.50 W max.	**Current consumption from I/O power supply**	30 mA max.
Weight	65 g max.		
Circuit layout	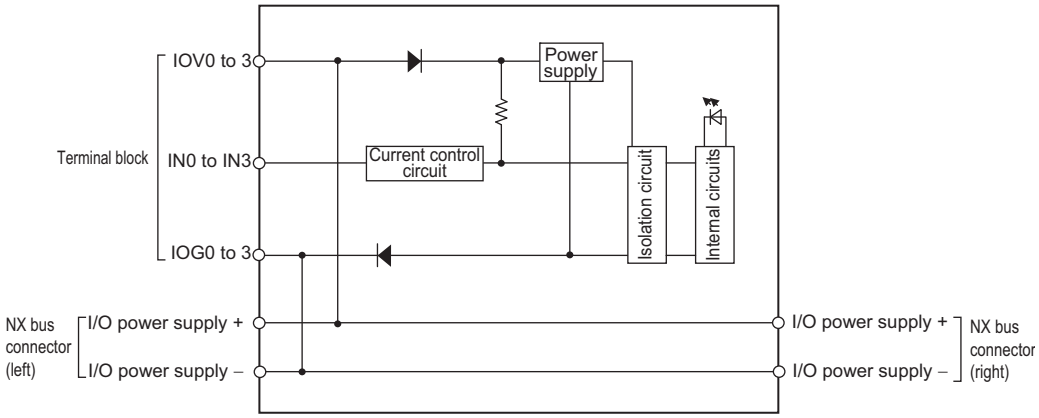 		
Installation orientation and restrictions	Installation orientation: • Connected to a CPU Unit: Possible in upright installation. • Connected to a Communications Coupler Unit: Possible in 6 orientations. Restrictions: No restrictions		
Terminal connection diagram	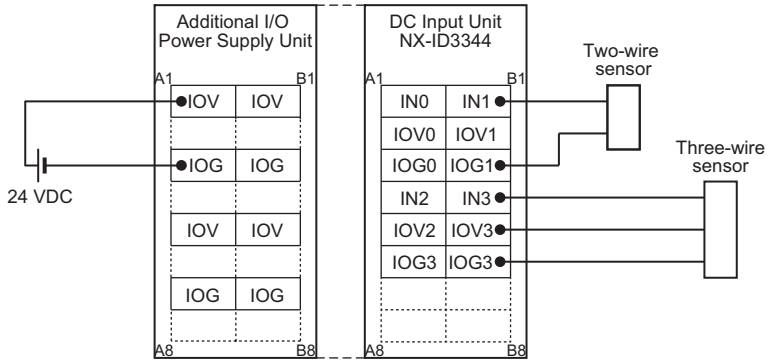 		
Disconnection/ Short-circuit detection	Not supported.	**Protective function**	Not supported.

* This model does not support the input filter. If the Unit is susceptible to noise, take countermeasures such as separating or shielding the Unit and signal lines from the noise source. Refer to NX-series Digital I/O Unit User's Manual (W521) for information on countermeasures.

NX-ID3417

Unit name	DC Input Unit	**Model**	NX-ID3417
Number of points	4 points	**External connection terminals**	Screwless clamping terminal block (12 terminals)
I/O refreshing method	Selectable Synchronous I/O refreshing or Free-Run refreshing		
Indicators	TS indicator, input indicator 	**Internal I/O common**	PNP
		Rated input voltage	12 to 24 VDC (9 to 28.8 VDC)
		Input current	6 mA typical (at 24 VDC), rated current
		ON voltage/ON current	9 VDC min./3 mA min. (between IOG and each signal)
		OFF voltage/OFF current	2 VDC max./1 mA max. (between IOG and each signal)
		ON/OFF response time	20 µs max./400 µs max.
		Input filter time	Without filter, 0.25 ms, 0.5 ms, 1 ms (factory setting), 2 ms, 4 ms, 8 ms, 16 ms, 32 ms, 64 ms, 128 ms, 256 ms
Dimensions	12 (W) x 100 (H) x 71 (D)	**Isolation method**	Photocoupler isolation
Insulation resistance	20 MΩ min. between isolated circuits (at 100 VDC)	**Dielectric strength**	510 VAC between isolated circuits for 1 minute at a leakage current of 5 mA max.
I/O power supply method	Supply from the NX bus	**Current capacity of I/O power supply terminal**	IOV: 0.1 A/terminal max., IOG: 0.1 A/terminal max.
NX Unit power consumption	• Connected to a CPU Unit or Communication Control Unit 0.90 W max. • Connected to a Communications Coupler Unit 0.50 W max.	**Current consumption from I/O power supply**	No consumption
Weight	65 g max.		
Circuit layout	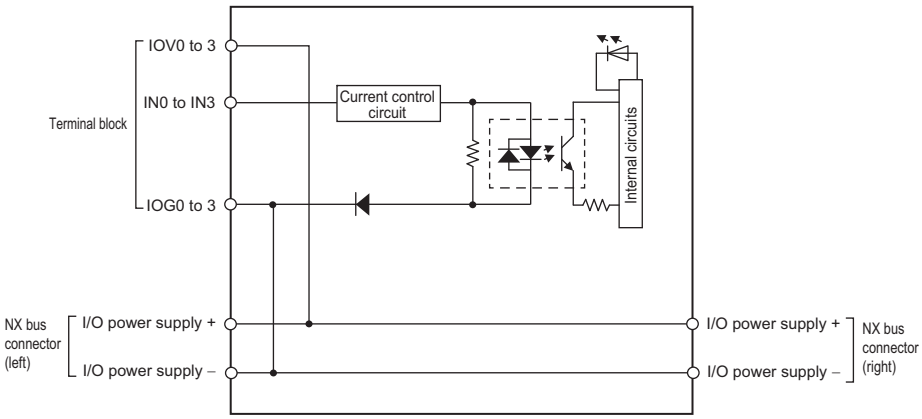 		
Installation orientation and restrictions	Installation orientation: • Connected to a CPU Unit or Communication Control Unit: Possible in upright installation. • Connected to a Communications Coupler Unit: Possible in 6 orientations. Restrictions: No restrictions		
Terminal connection diagram	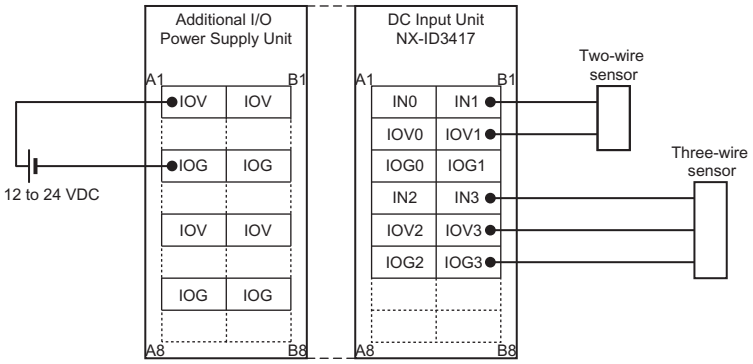 		
Disconnection/ Short-circuit detection	Not supported.	**Protective function**	Not supported.

NX-ID3443

Unit name	DC Input Unit	**Model**	NX-ID3443
Number of points	4 points	**External connection terminals**	Screwless clamping terminal block (12 terminals)
I/O refreshing method	Selectable Synchronous I/O refreshing or Free-Run refreshing		
Indicators	TS indicator, input indicator 	**Internal I/O common**	PNP
		Rated input voltage	24 VDC (15 to 28.8 VDC)
		Input current	3.5 mA typical (at 24 VDC), rated current
		ON voltage/ON current	15 VDC min./3 mA min. (between IOG and each signal)
		OFF voltage/OFF current	5 VDC max./1 mA max. (between IOG and each signal)
		ON/OFF response time	100 ns max./100 ns max.
		Input filter time	Without filter, 1 µs, 2 µs, 4 µs, 8 µs (factory setting),16 µs, 32 µs, 64 µs, 128 µs, 256 µs
Dimensions	12 (W) x 100 (H) x 71 (D)	**Isolation method**	Digital isolator isolation
Insulation resistance	20 MΩ min. between isolated circuits (at 100 VDC)	**Dielectric strength**	510 VAC between isolated circuits for 1 minute at a leakage current of 5 mA max.
I/O power supply method	Supply from the NX bus	**Current capacity of I/O power supply terminal**	IOV: 0.1 A/terminal max., IOG: 0.1 A/terminal max.
NX Unit power consumption	• Connected to a CPU Unit or Communication Control Unit 0.90 W max. • Connected to a Communications Coupler Unit 0.55 W max.	**Current consumption from I/O power supply**	30 mA max.
Weight	65 g max.		
Circuit layout	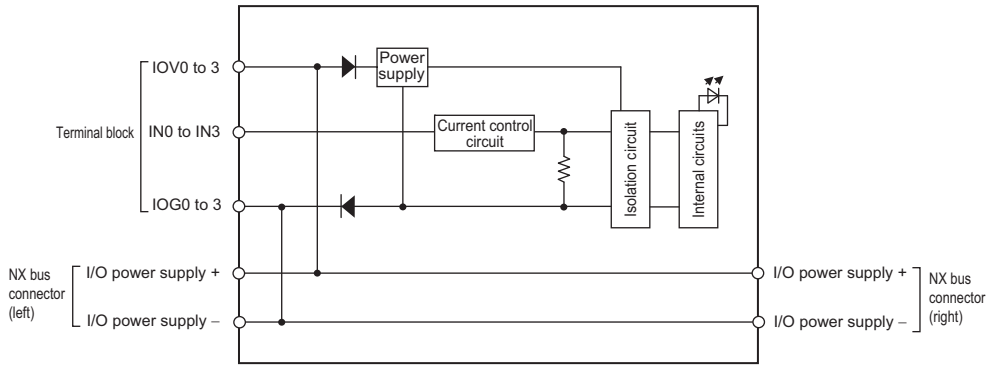 		
Installation orientation and restrictions	Installation orientation: • Connected to a CPU Unit or Communication Control Unit: Possible in upright installation. • Connected to a Communications Coupler Unit: Possible in 6 orientations. Restrictions: No restrictions		
Terminal connection diagram	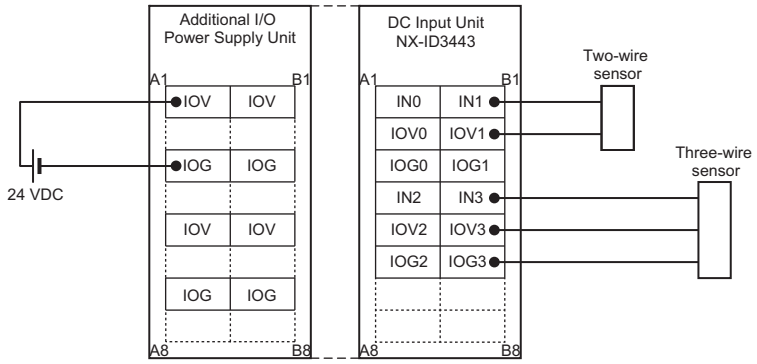 		
Disconnection/ Short-circuit detection	Not supported.	**Protective function**	Not supported.

NX-ID3444

Unit name	DC Input Unit	**Model**	NX-ID3444
Number of points	4 points	**External connection terminals**	Screwless clamping terminal block (12 terminals)
I/O refreshing method	Input refreshing with input changed time		
Indicators	TS indicator, input indicators 	**Internal I/O common**	PNP
		Rated input voltage	24 VDC (15 to 28.8 VDC)
		Input current	3.5 mA typical (at 24 VDC), rated current
		ON voltage/ON current	15 VDC min./3 mA min. (between IOG and each signal)
		OFF voltage/OFF current	5 VDC max./1 mA max. (between IOG and each signal)
		ON/OFF response time	100 ns max./100 ns max.
		Input filter time	No filter*
Dimensions	12 (W) x 100 (H) x 71 (D)	**Isolation method**	Digital isolator isolation
Insulation resistance	20 MΩ min. between isolated circuits (at 100 VDC)	**Dielectric strength**	510 VAC between isolated circuits for 1 minute at a leakage current of 5 mA max.
I/O power supply method	Supply from the NX bus	**Current capacity of I/O power supply terminal**	IOV: 0.1 A/terminal max., IOG: 0.1 A/terminal max.
NX Unit power consumption	• Connected to a CPU Unit 0.90 W max. • Connected to a Communications Coupler Unit 0.50 W max.	**Current consumption from I/O power supply**	30 mA max.
Weight	65 g max.		
Circuit layout	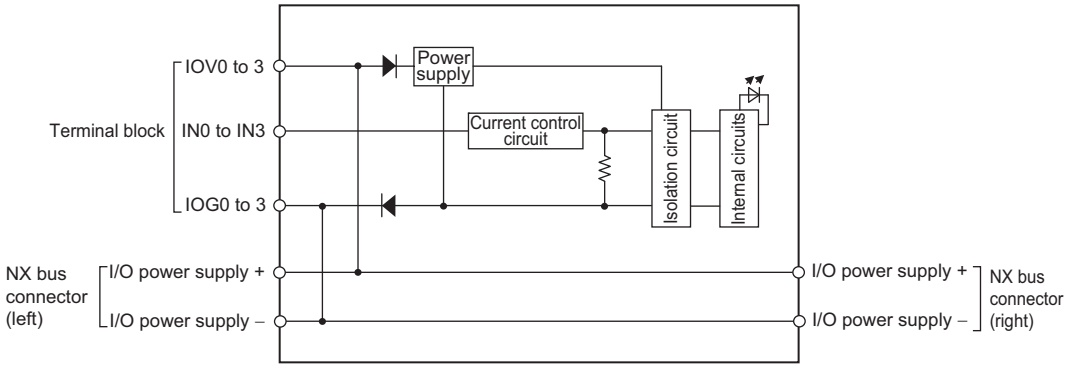 		
Installation orientation and restrictions	Installation orientation: • Connected to a CPU Unit: Possible in upright installation. • Connected to a Communications Coupler Unit: Possible in 6 orientations. Restrictions: No restrictions		
Terminal connection diagram	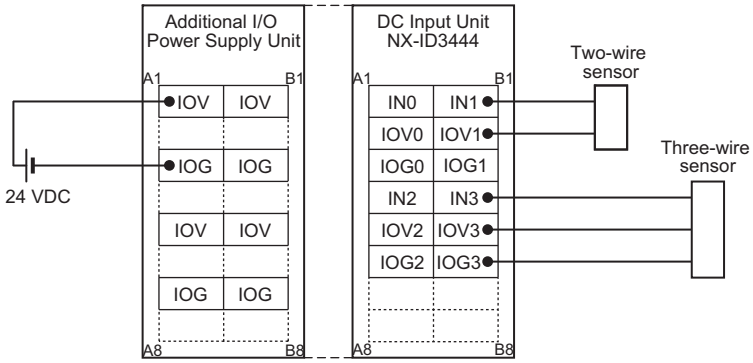 		
Disconnection/ Short-circuit detection	Not supported.	**Protective function**	Not supported.

* This model does not support the input filter. If the Unit is susceptible to noise, take countermeasures such as separating or shielding the Unit and signal lines from the noise source. Refer to NX-series Digital I/O Unit User's Manual (W521) for information on countermeasures.

NX-ID4342

Unit name	DC Input Unit	**Model**	NX-ID4342
Number of points	8 points	**External connection terminals**	Screwless clamping terminal block (16 terminals)
I/O refreshing method	Selectable Synchronous I/O refreshing or Free-Run refreshing		
Indicators	TS indicator, input indicator 	**Internal I/O common**	NPN
		Rated input voltage	24 VDC (15 to 28.8 VDC)
		Input current	3.5 mA typical (at 24 VDC), rated current
		ON voltage/ON current	15 VDC min./3 mA min. (between IOG and each signal)
		OFF voltage/OFF current	5 VDC max./1 mA max. (between IOG and each signal)
		ON/OFF response time	20 µs max./400 µs max.
		Input filter time	Without filter, 0.25 ms, 0.5 ms, 1 ms (factory setting), 2 ms, 4 ms, 8 ms, 16 ms, 32 ms, 64 ms, 128 ms, 256 ms
Dimensions	12 (W) x 100 (H) x 71 (D)	**Isolation method**	Photocoupler isolation
Insulation resistance	20 MΩ min. between isolated circuits (at 100 VDC)	**Dielectric strength**	510 VAC between isolated circuits for 1 minute at a leakage current of 5 mA max.
I/O power supply method	Supply from the NX bus	**Current capacity of I/O power supply terminal**	IOG: 0.1 A/terminal max.
NX Unit power consumption	• Connected to a CPU Unit or Communication Control Unit 0.90 W max. • Connected to a Communications Coupler Unit 0.50 W max.	**Current consumption from I/O power supply**	No consumption
Weight	65 g max.		
Circuit layout	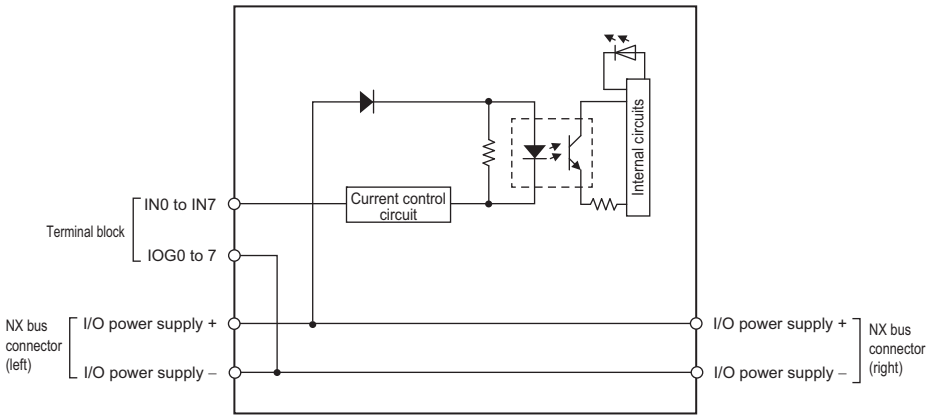 		
Installation orientation and restrictions	Installation orientation: • Connected to a CPU Unit or Communication Control Unit: Possible in upright installation. • Connected to a Communications Coupler Unit: Possible in 6 orientations. Restrictions: No restrictions		
Terminal connection diagram	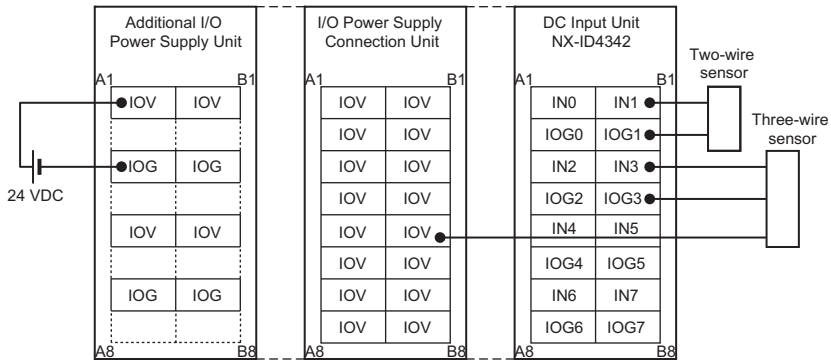 		
Disconnection/ Short-circuit detection	Not supported.	**Protective function**	Not supported.

NX-ID4442

Unit name	DC Input Unit	**Model**	NX-ID4442
Number of points	8 points	**External connection terminals**	Screwless clamping terminal block (16 terminals)
I/O refreshing method	Selectable Synchronous I/O refreshing or Free-Run refreshing		
Indicators	TS indicator, input indicator ID4442 TS 0 1 2 3 4 5 6 7	**Internal I/O common**	PNP
		Rated input voltage	24 VDC (15 to 28.8 VDC)
		Input current	3.5 mA typical (at 24 VDC), rated current
		ON voltage/ON current	15 VDC min./3 mA min. (between IOG and each signal)
		OFF voltage/OFF current	5 VDC max./1 mA max. (between IOG and each signal)
		ON/OFF response time	20 µs max./400 µs max.
		Input filter time	Without filter, 0.25 ms, 0.5 ms, 1 ms (factory setting), 2 ms, 4 ms, 8 ms, 16 ms, 32 ms, 64 ms, 128 ms, 256 ms
Dimensions	12 (W) x 100 (H) x 71 (D)	**Isolation method**	Photocoupler isolation
Insulation resistance	20 MΩ min. between isolated circuits (at 100 VDC)	**Dielectric strength**	510 VAC between isolated circuits for 1 minute at a leakage current of 5 mA max.
I/O power supply method	Supply from the NX bus	**Current capacity of I/O power supply terminal**	IOV: 0.1 A/terminal max.
NX Unit power consumption	• Connected to a CPU Unit or Communication Control Unit 0.90 W max. • Connected to a Communications Coupler Unit 0.50 W max.	**Current consumption from I/O power supply**	No consumption
Weight	65 g max.		
Circuit layout	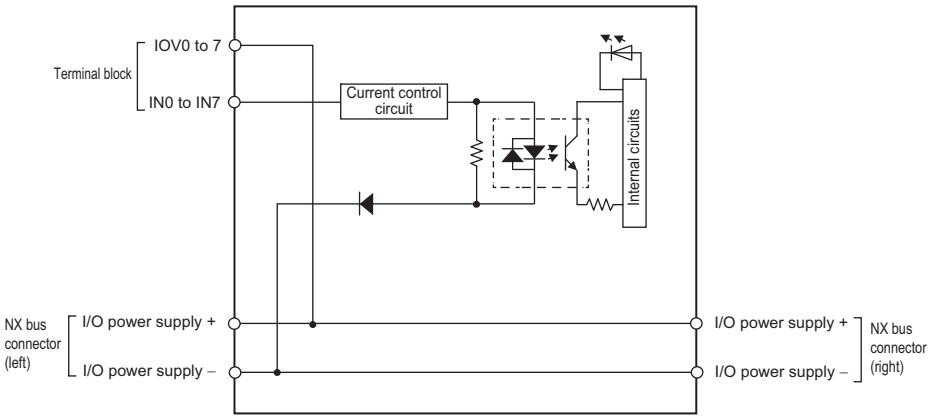		
Installation orientation and restrictions	Installation orientation: • Connected to a CPU Unit or Communication Control Unit: Possible in upright installation. • Connected to a Communications Coupler Unit: Possible in 6 orientations. Restrictions: No restrictions		
Terminal connection diagram	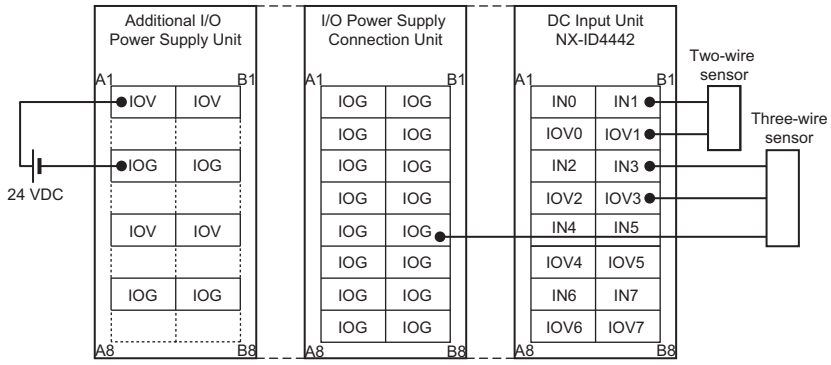		
Disconnection/ Short-circuit detection	Not supported.	**Protective function**	Not supported.

NX-ID5342

Unit name	DC Input Unit	**Model**	NX-ID5342
Number of points	16 points	**External connection terminals**	Screwless clamping terminal block (16 terminals)
I/O refreshing method	Selectable Synchronous I/O refreshing or Free-Run refreshing		
Indicators	TS indicator, input indicator 	**Internal I/O common**	NPN
		Rated input voltage	24 VDC (15 to 28.8 VDC)
		Input current	2.5 mA typical (at 24 VDC), rated current
		ON voltage/ON current	15 VDC min./2 mA min. (between IOG and each signal)
		OFF voltage/OFF current	5 VDC max./0.5 mA max. (between IOG and each signal)
		ON/OFF response time	20 µs max./400 µs max.
		Input filter time	Without filter, 0.25 ms, 0.5 ms, 1 ms (factory setting), 2 ms, 4 ms, 8 ms, 16 ms, 32 ms, 64 ms, 128 ms, 256 ms
Dimensions	12 (W) x 100 (H) x 71 (D)	**Isolation method**	Photocoupler isolation
Insulation resistance	20 MΩ min. between isolated circuits (at 100 VDC)	**Dielectric strength**	510 VAC between isolated circuits for 1 minute at a leakage current of 5 mA max.
I/O power supply method	Supply from the NX bus	**Current capacity of I/O power supply terminal**	Without I/O power supply terminals
NX Unit power consumption	• Connected to a CPU Unit or Communication Control Unit 0.90 W max. • Connected to a Communications Coupler Unit 0.55 W max.	**Current consumption from I/O power supply**	No consumption
Weight	65 g max.		
Circuit layout	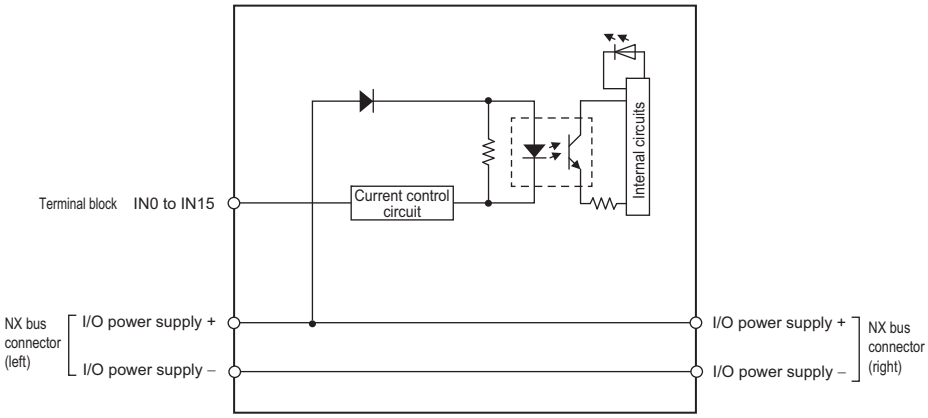 		
Installation orientation and restrictions	Installation orientation: • Connected to a CPU Unit or Communication Control Unit: Possible in upright installation. • Connected to a Communications Coupler Unit: Possible in 6 orientations. Restrictions: No restrictions		
Terminal connection diagram	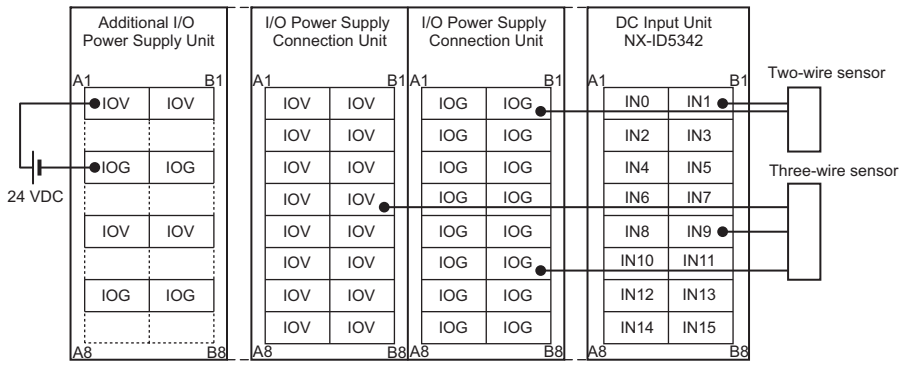 		
Disconnection/ Short-circuit detection	Not supported.	**Protective function**	Not supported.

NX-ID5442

Unit name	DC Input Unit	**Model**	NX-ID5442
Number of points	16 points	**External connection terminals**	Screwless clamping terminal block (16 terminals)
I/O refreshing method	Selectable Synchronous I/O refreshing or Free-Run refreshing		
Indicators	TS indicator, input indicator 	**Internal I/O common**	PNP
		Rated input voltage	24 VDC (15 to 28.8 VDC)
		Input current	2.5 mA typical (at 24 VDC), rated current
		ON voltage/ON current	15 VDC min./2 mA min. (between IOG and each signal)
		OFF voltage/OFF current	5 VDC max./0.5 mA max. (between IOG and each signal)
		ON/OFF response time	20 µs max./400 µs max.
		Input filter time	Without filter, 0.25 ms, 0.5 ms, 1 ms (factory setting), 2 ms, 4 ms, 8 ms, 16 ms, 32 ms, 64 ms, 128 ms, 256 ms
Dimensions	12 (W) x 100 (H) x 71 (D)	**Isolation method**	Photocoupler isolation
Insulation resistance	20 MΩ min. between isolated circuits (at 100 VDC)	**Dielectric strength**	510 VAC between isolated circuits for 1 minute at a leakage current of 5 mA max.
I/O power supply method	Supply from the NX bus	**Current capacity of I/O power supply terminal**	Without I/O power supply terminals
NX Unit power consumption	• Connected to a CPU Unit or Communication Control Unit 0.90 W max. • Connected to a Communications Coupler Unit 0.55 W max.	**Current consumption from I/O power supply**	No consumption
Weight	65 g max.		
Circuit layout	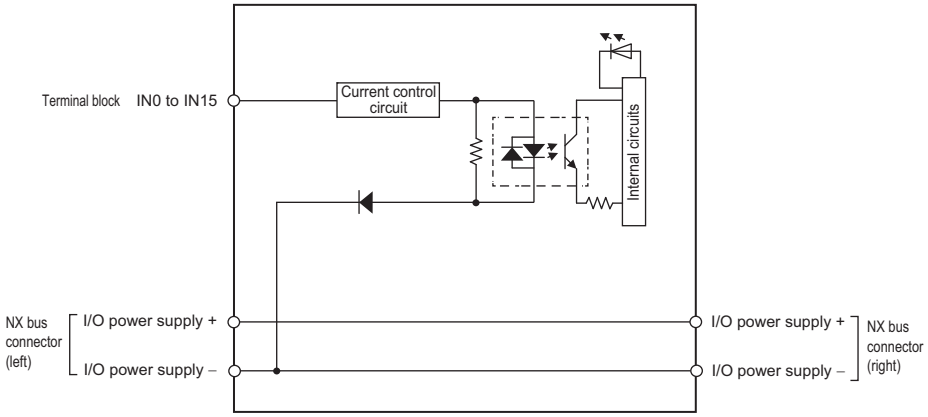 		
Installation orientation and restrictions	Installation orientation: • Connected to a CPU Unit or Communication Control Unit: Possible in upright installation. • Connected to a Communications Coupler Unit: Possible in 6 orientations. Restrictions: No restrictions		
Terminal connection diagram	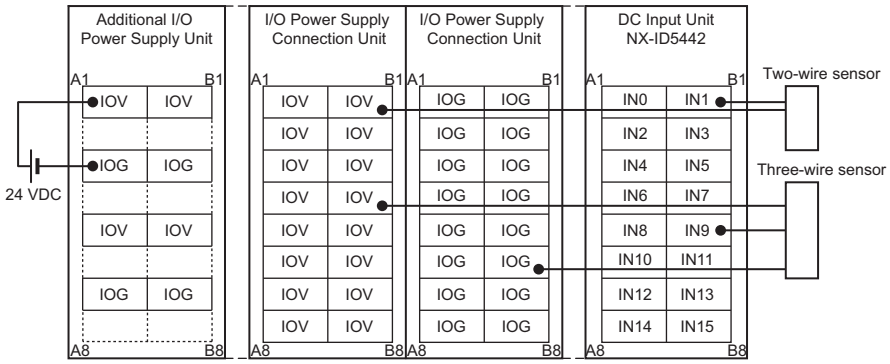 		
Disconnection/ Short-circuit detection	Not supported.	**Protective function**	Not supported.

● DC Input Unit (M3 Screw Terminal Block, 30 mm Width)
NX-ID5142-1

Unit name	DC Input Unit	**Model**	NX-ID5142-1
Number of points	16 points	**External connection terminals**	M3 screw terminal block (18 terminals)
I/O refreshing method	Switching Synchronous I/O refreshing and Free-Run refreshing		
Indicators	TS indicator, input indicators 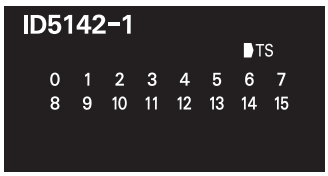 	**Internal I/O common**	For both NPN/PNP
		Rated input voltage	24 VDC (15 to 28.8 VDC)
		Input current	7 mA typical (at 24 VDC)
		ON voltage/ON current	15 VDC min./3 mA min. (between COM and each signal)
		OFF voltage/OFF current	5 VDC max./1 mA max. (between COM and each signal)
		ON/OFF response time	20 µs max./400 µs max.
		Input filter time	No filter, 0.25 ms, 0.5 ms, 1 ms (default), 2 ms, 4 ms, 8 ms, 16 ms, 32 ms, 64 ms, 128 ms, 256 ms
Dimensions	30 (W) x 100 (H) x 71 (D)	**Isolation method**	Photocoupler isolation
Insulation resistance	20 MΩ min. between isolated circuits (at 100 VDC)	**Dielectric strength**	510 VAC between isolated circuits for 1 minute at a leakage current of 5 mA max.
I/O power supply method	Supply from external source	**Current capacity of I/O power supply terminal**	Without I/O power supply terminals
NX Unit power consumption	• Connected to a CPU Unit or Communication Control Unit 0.85 W max. • Connected to a Communications Coupler Unit 0.55 W max.	**Current consumption from I/O power supply**	No consumption
Weight	125 g max.		
Circuit layout	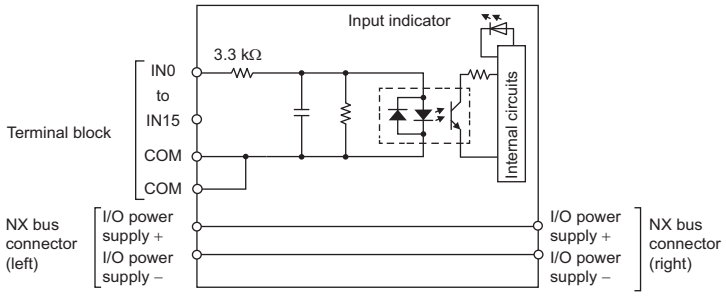 		

Installation orientation and restrictions

Installation orientation:
- Connected to a CPU Unit or Communication Control Unit: Possible in upright installation.
- Connected to a Communications Coupler Unit: Possible in 6 orientations.

Restrictions: As shown in the following.

- For upright installation

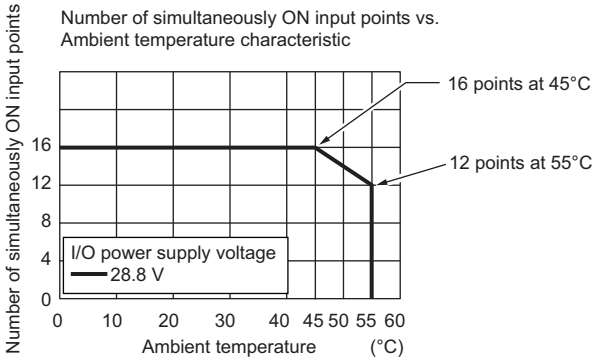

- For any installation other than upright

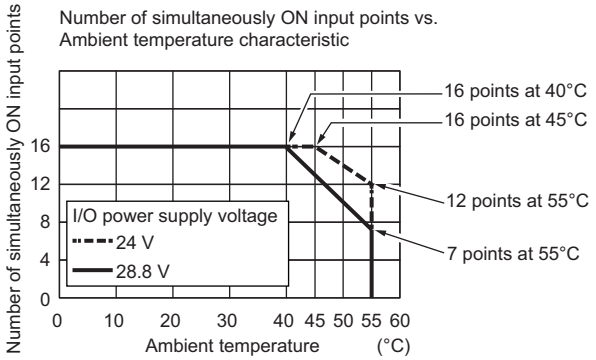

Terminal connection diagram

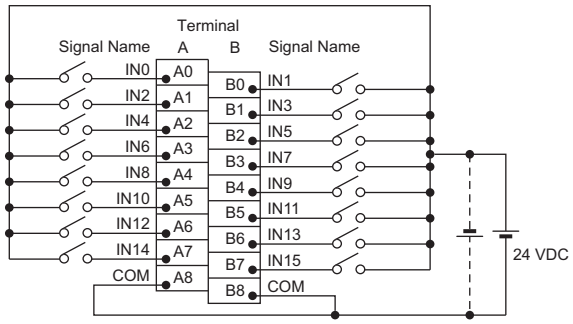

- The polarity of the input power supply can be connected in either direction.

Disconnection/ Short-circuit detection	Not supported.	**Protective function**	Not supported.

● DC Input Unit (MIL Connector, 30 mm Width)
NX-ID5142-5

Unit name	DC Input Unit	**Model**	NX-ID5142-5
Number of points	16 points	**External connection terminals**	MIL connector (20 terminals)
I/O refreshing method	Switching Synchronous I/O refreshing and Free-Run refreshing		
Indicators	TS indicator, input indicators 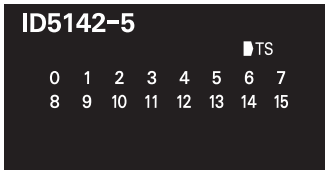 	**Internal I/O common**	For both NPN/PNP
		Rated input voltage	24 VDC (15 to 28.8 VDC)
		Input current	7 mA typical (at 24 VDC)
		ON voltage/ON current	15 VDC min./3 mA min. (between COM and each signal)
		OFF voltage/OFF current	5 VDC max./1 mA max. (between COM and each signal)
		ON/OFF response time	20 µs max./400 µs max.
		Input filter time	No filter, 0.25 ms, 0.5 ms, 1 ms (default), 2 ms, 4 ms, 8 ms, 16 ms, 32 ms, 64 ms, 128 ms, 256 ms
Dimensions	30 (W) x 100 (H) x 71 (D)	**Isolation method**	Photocoupler isolation
Insulation resistance	20 MΩ min. between isolated circuits (at 100 VDC)	**Dielectric strength**	510 VAC between isolated circuits for 1 minute at a leakage current of 5 mA max.
I/O power supply method	Supply from external source	**Current capacity of I/O power supply terminal**	Without I/O power supply terminals
NX Unit power consumption	• Connected to a CPU Unit or Communication Control Unit 0.85 W max. • Connected to a Communications Coupler Unit 0.55 W max.	**Current consumption from I/O power supply**	No consumption
Weight	85 g max.		
Circuit layout	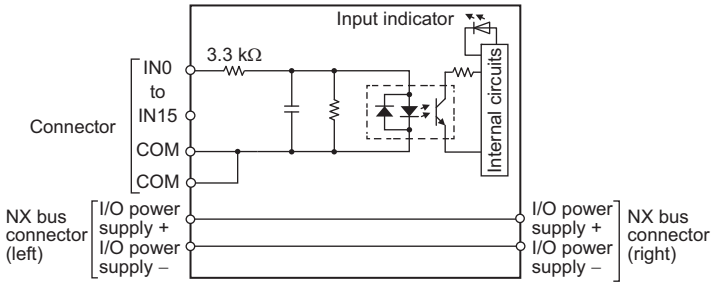 		

Installation orientation and restrictions

Installation orientation:
- Connected to a CPU Unit or Communication Control Unit: Possible in upright installation.
- Connected to a Communications Coupler Unit: Possible in 6 orientations.

Restrictions: As shown in the following.

- For upright installation

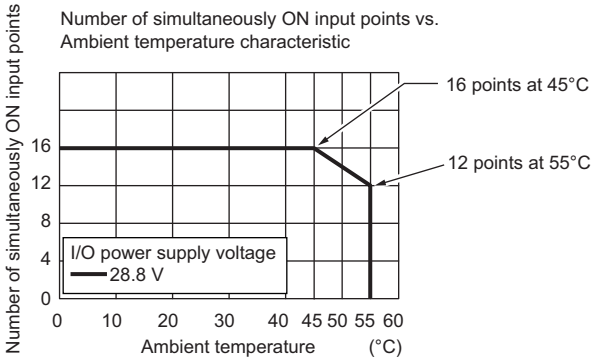

- For any installation other than upright

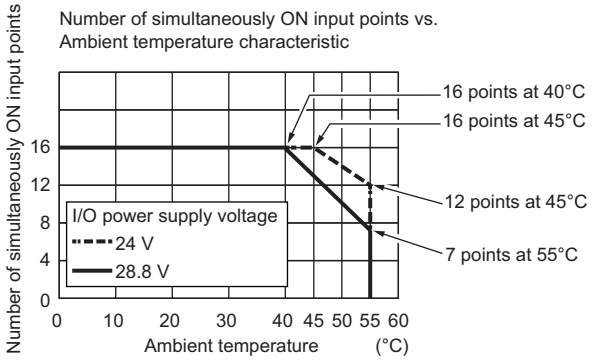

Terminal connection diagram

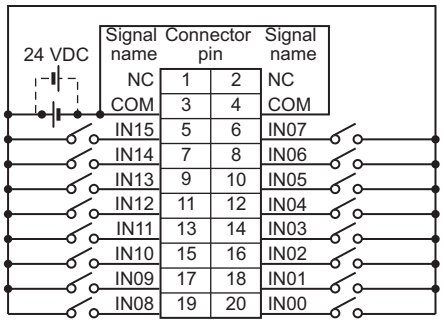

Signal name	Connector pin		Signal name
NC	1	2	NC
COM	3	4	COM
IN15	5	6	IN07
IN14	7	8	IN06
IN13	9	10	IN05
IN12	11	12	IN04
IN11	13	14	IN03
IN10	15	16	IN02
IN09	17	18	IN01
IN08	19	20	IN00

- The polarity of the input power supply can be connected in either direction.
- Be sure to wire both pins 3 and 4 (COM), and set the same polarity for both pins.

Disconnection/ Short-circuit detection	Not supported.	**Protective function**	Not supported.

NX-ID6142-5

Unit name	DC Input Unit	**Model**	NX-ID6142-5
Number of points	32 points	**External connection terminals**	MIL connector (40 terminals)
I/O refreshing method	Switching Synchronous I/O refreshing and Free-Run refreshing		
Indicators	TS indicator, input indicators 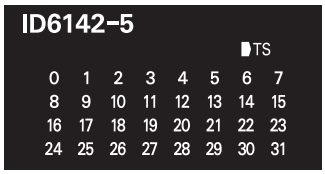 	**Internal I/O common**	For both NPN/PNP
		Rated input voltage	24 VDC (19 to 28.8 VDC)
		Input current	4.1 mA typical (24 VDC)
		ON voltage/ON current	19 VDC min./3 mA min. (between COM and each signal)
		OFF voltage/OFF current	5 VDC max./1 mA max. (between COM and each signal)
		ON/OFF response time	20 µs max./400 µs max.
		Input filter time	No filter, 0.25 ms, 0.5 ms, 1 ms (default), 2 ms, 4 ms, 8 ms, 16 ms, 32 ms, 64 ms, 128 ms, 256 ms
Dimensions	30 (W) x 100 (H) x 71 (D)	**Isolation method**	Photocoupler isolation
Insulation resistance	20 MΩ min. between isolated circuits (at 100 VDC)	**Dielectric strength**	510 VAC between isolated circuits for 1 minute at a leakage current of 5 mA max.
I/O power supply method	Supply from external source	**Current capacity of I/O power supply terminal**	Without I/O power supply terminals
NX Unit power consumption	• Connected to a CPU Unit or Communication Control Unit 0.90 W max. • Connected to a Communications Coupler Unit 0.60 W max.	**Current consumption from I/O power supply**	No consumption
Weight	90 g max.		
Circuit layout	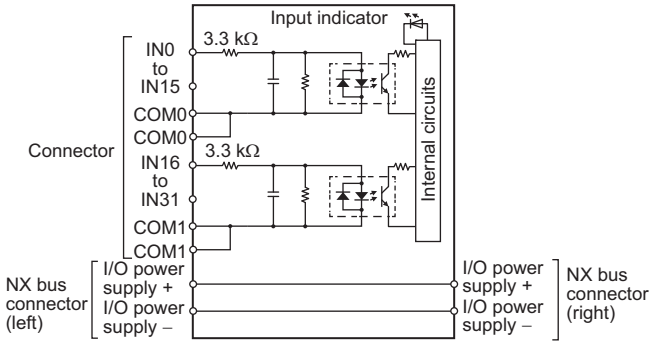 		

Installation orientation and restrictions

Installation orientation:
- Connected to a CPU Unit or Communication Control Unit: Possible in upright installation.
- Connected to a Communications Coupler Unit: Possible in 6 orientations.

Restrictions: As shown in the following.

- For upright installation

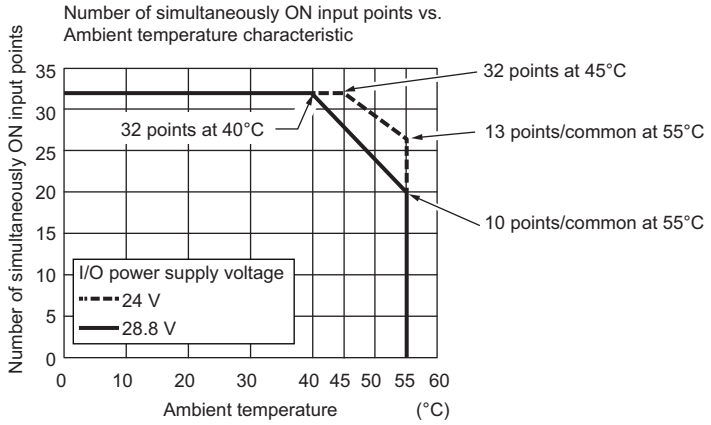

- For any installation other than upright

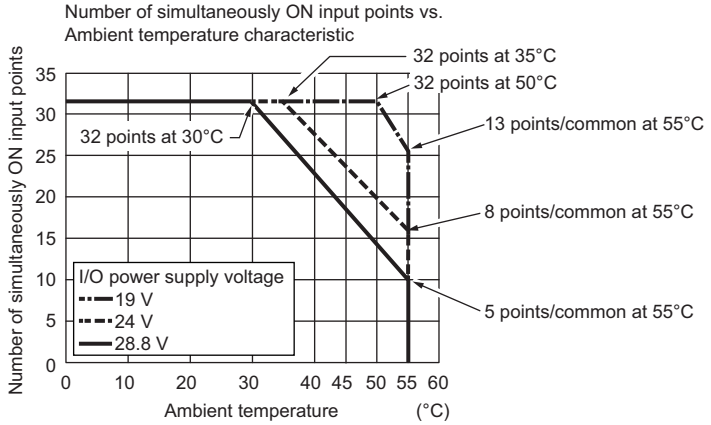

Terminal connection diagram

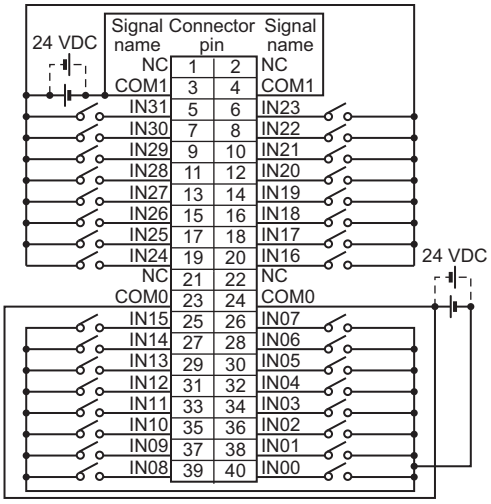

- The polarity of the input power supply can be connected in either direction.
- Be sure to wire both pins 23 and 24 (COM0), and set the same polarity for both pins.
- Be sure to wire both pins 3 and 4 (COM1), and set the same polarity for both pins.

Disconnection/ Short-circuit detection	Not supported.	**Protective function**	Not supported.

● DC Input Unit (Fujitsu Connector, 30 mm Width)
NX-ID6142-6

Unit name	DC Input Unit	**Model**	NX-ID6142-6
Number of points	32 points	**External connection terminals**	Fujitsu connector (40 terminals)
I/O refreshing method	Switching Synchronous I/O refreshing and Free-Run refreshing		
Indicators	TS indicator, input indicators ID6142-6 TS 0 1 2 3 4 5 6 7 8 9 10 11 12 13 14 15 16 17 18 19 20 21 22 23 24 25 26 27 28 29 30 31	**Internal I/O common**	For both NPN/PNP
		Rated input voltage	24 VDC (19 to 28.8 VDC)
		Input current	4.1 mA typical (24 VDC)
		ON voltage/ON current	19 VDC min./3 mA min. (between COM and each signal)
		OFF voltage/OFF current	5 VDC max./1 mA max. (between COM and each signal)
		ON/OFF response time	20 µs max./400 µs max.
		Input filter time	No filter, 0.25 ms, 0.5 ms, 1 ms (default), 2 ms, 4 ms, 8 ms, 16 ms, 32 ms, 64 ms, 128 ms, 256 ms
Dimensions	30 (W) x 100 (H) x 71 (D)	**Isolation method**	Photocoupler isolation
Insulation resistance	20 MΩ min. between isolated circuits (at 100 VDC)	**Dielectric strength**	510 VAC between isolated circuits for 1 minute at a leakage current of 5 mA max.
I/O power supply method	Supply from external source	**Current capacity of I/O power supply terminal**	Without I/O power supply terminals
NX Unit power consumption	• Connected to a CPU Unit or Communication Control Unit 0.95 W max. • Connected to a Communications Coupler Unit 0.55 W max.	**Current consumption from I/O power supply**	No consumption
Weight	90 g max.		
Circuit layout	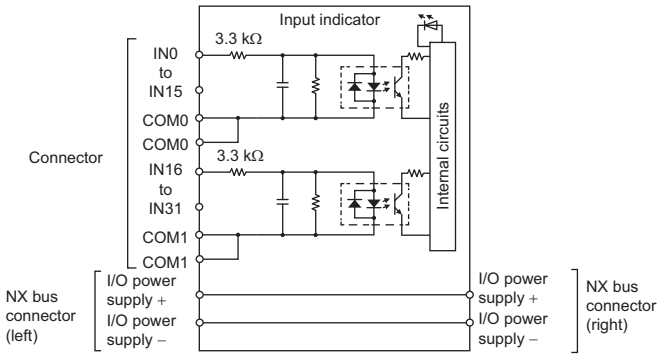		

Installation orientation and restrictions

Installation orientation:
- Connected to a CPU Unit or Communication Control Unit: Possible in upright installation.
- Connected to a Communications Coupler Unit: Possible in 6 orientations.

Restrictions: As shown in the following.

• For upright installation

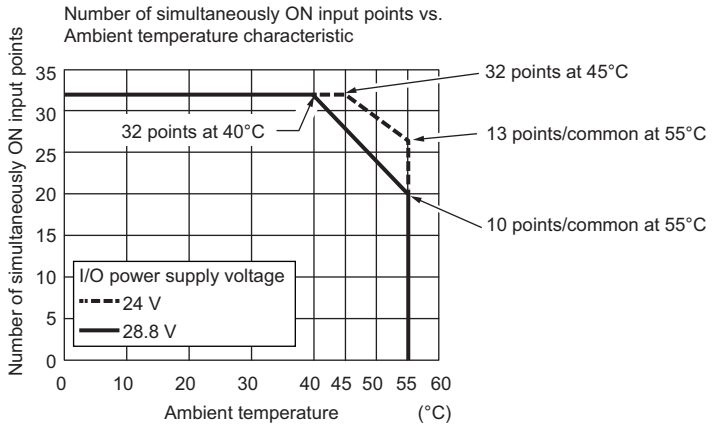

• For any installation other than upright

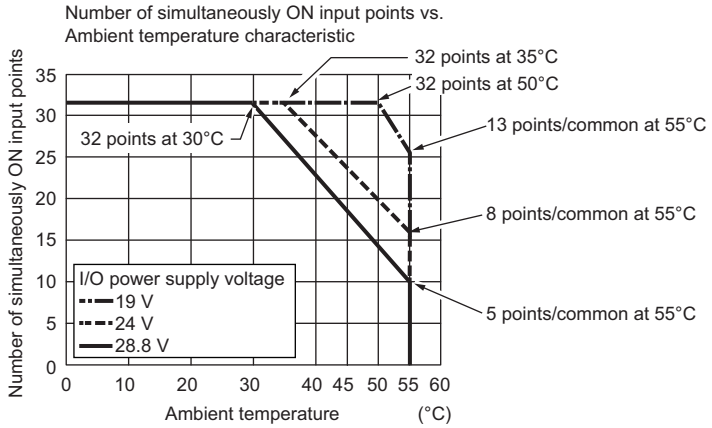

Terminal connection diagram

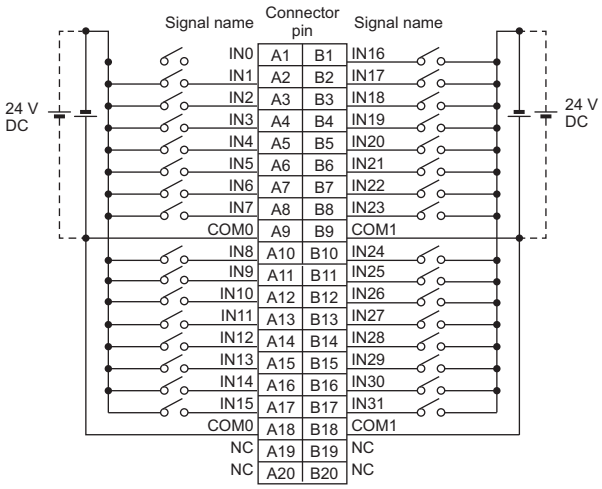

- The polarity of the input power supply can be connected in either direction.
- Be sure to wire both pins A9 and A18 (COM0), and set the same polarity for both pins.
- Be sure to wire both pins B9 and B18 (COM1), and set the same polarity for both pins.

Disconnection/ Short-circuit detection	Not supported.	**Protective function**	Not supported.

● AC Input Unit (Screwless Clamping Terminal Block, 12 mm Width) NX-IA3117

Unit name	AC Input Unit	**Model**	NX-IA3117
Number of points	4 points, independent contacts	**External connection terminals**	Screwless clamping terminal block (8 terminals)
Capacity	Free-Run refreshing		
Indicators	TS indicator, input indicator 	**Internal I/O common**	No polarity
		Rated input voltage	200 to 240 VAC, 50/60 Hz (170 to 264 VAC, ±3 Hz)
		Input current	9 mA typical (at 200 VAC, 50 Hz) 11 mA typical (at 200 VAC, 60 Hz)
		ON voltage/ON current	120 VAC min./4 mA min.
		OFF voltage/OFF current	40 VAC max./2 mA max.
		ON/OFF response time	10 ms max./40 ms max.
		Input filter time	No filter, 0.25 ms, 0.5 ms, 1 ms (default), 2 ms, 4 ms, 8 ms, 16 ms, 32 ms, 64 ms, 128 ms, 256 ms
Dimensions	12 (W) x 100 (H) x 71 (D)	**Isolation method**	Photocoupler isolation
Insulation resistance	Between each AC input circuit: 20 MΩ min. (at 500 VDC) Between the external terminals and the functional ground terminal: 20 MΩ min. (at 500 VDC) Between the external terminals and internal circuits: 20 MΩ min. (at 500 VDC) Between the internal circuit and the functional ground terminal: 20 MΩ min. (at 100 VDC)	**Dielectric strength**	Between each AC input circuit: AC3700V VAC for 1 min at a leakage current of 5 mA max. Between the external terminals and functional ground terminal: 2300 VAC for 1 min at a leakage current of 5 mA max. Between the external terminals and internal circuits: 2300 VAC for 1 min at a leakage current of 5 mA max. Between the internal circuit and the functional ground terminal: 510 VAC for 1 min at a leakage current of 5 mA max.
I/O power supply method	Supplied from external source.	**Current capacity of I/O power supply terminal**	Without I/O power supply terminals
NX Unit power consumption	• Connected to a CPU Unit or Communication Control Unit 0.80 W max. • Connected to a Communications Coupler Unit 0.50 W max.	**Current consumption from I/O power supply**	No consumption
Weight	60 g max.		
Circuit layout	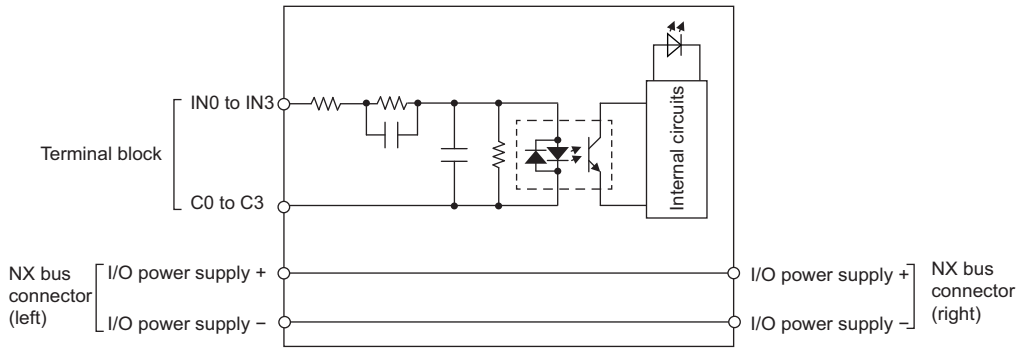		
Installation orientation and restrictions	Installation orientation: • Connected to a CPU Unit or Communication Control Unit: Possible in upright installation. • Connected to a Communications Coupler Unit: Possible in 6 orientations. Restrictions: No restrictions		
Terminal connection diagram	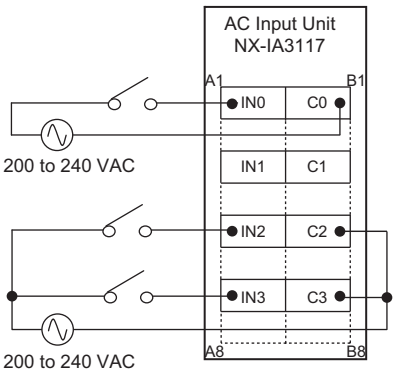		
Disconnection/ Short-circuit detection	Not supported.	**Protective function**	Not supported.

Digital Output Unit Specifications

● Transistor Output Unit (Screwless Clamping Terminal Block, 12 mm Width) NX-OD2154

Unit name	Transistor Output Unit	**Model**	NX-OD2154
Number of points	2 points	**External connection terminals**	Screwless clamping terminal block (8 terminals)
I/O refreshing method	Output refreshing with specified time stamp		
Indicators	TS indicator, output indicator 	**Internal I/O common**	NPN
		Rated voltage	24 VDC
		Operating load voltage range	15 to 28.8 VDC
		Maximum value of load current	0.5 A/point, 1 A/Unit
		Maximum inrush current	4.0 A/point, 10 ms max.
		Leakage current	0.1 mA max.
		Residual voltage	1.5 V max.
		ON/OFF response time	300 ns max./300 ns max.
Dimensions	12 (W) x 100 (H) x 71 (D)	**Isolation method**	Digital isolator isolation
Insulation resistance	20 MΩ min. between isolated circuits (at 100 VDC)	**Dielectric strength**	510 VAC between isolated circuits for 1 minute at a leakage current of 5 mA max.
I/O power supply method	Supply from the NX bus	**Current capacity of I/O power supply terminal**	IOV: 0.5 A/terminal max., IOG: 0.5 A/terminal max.
NX Unit power consumption	• Connected to a CPU Unit 0.85 W max. • Connected to a Communications Coupler Unit 0.45 W max.	**I/O current consumption**	30 mA max.
Weight	70 g max.		
Circuit layout	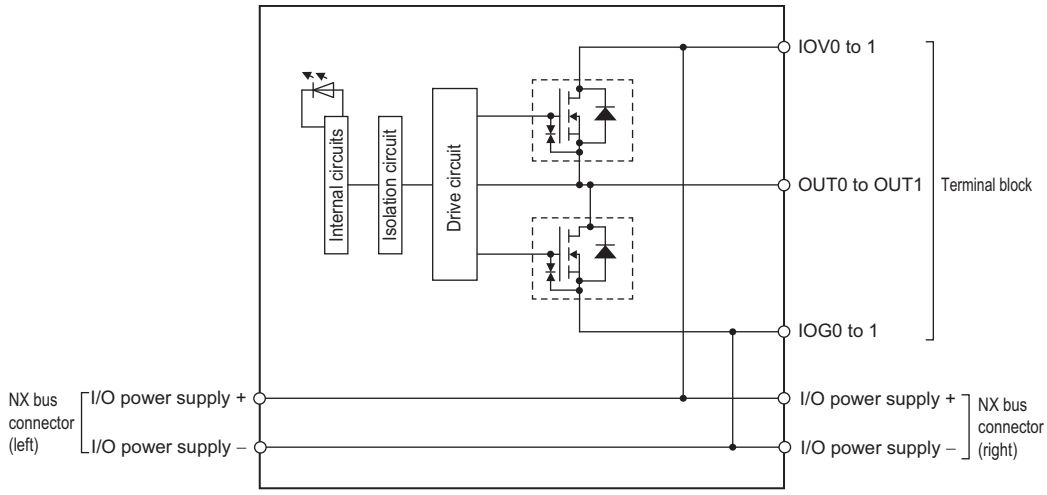 This unit uses a push-pull output circuit.		
Installation orientation and restrictions	Installation orientation: • Connected to a CPU Unit: Possible in upright installation. • Connected to a Communications Coupler Unit: Possible in 6 orientations. Restrictions: No restrictions		
Terminal connection diagram	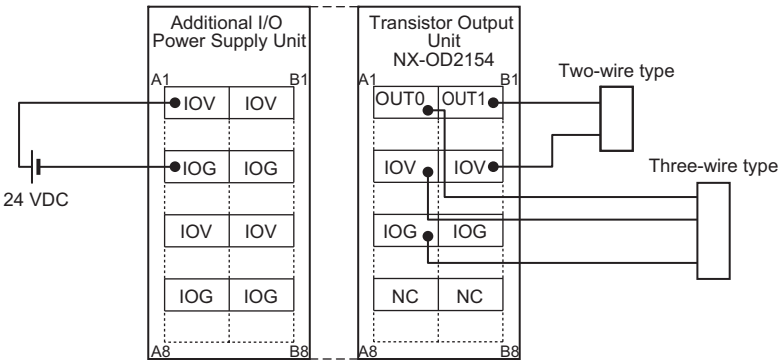 		
Disconnection/ Short-circuit detection	Not supported.	**Protective function**	Not supported.

NX-OD2258

Unit name	Transistor Output Unit	**Model**	NX-OD2258
Number of points	2 points	**External connection terminals**	Screwless clamping terminal block (8 terminals)
I/O refreshing method	Output refreshing with specified time stamp		
Indicators	TS indicator, output indicator 	**Internal I/O common**	PNP
		Rated voltage	24 VDC
		Operating load voltage range	15 to 28.8 VDC
		Maximum value of load current	0.5 A/point, 1 A/Unit
		Maximum inrush current	4.0 A/point, 10 ms max.
		Leakage current	0.1 mA max.
		Residual voltage	1.5 V max.
		ON/OFF response time	300 ns max./300 ns max.
Dimensions	12 (W) x 100 (H) x 71 (D)	**Isolation method**	Digital isolator isolation
Insulation resistance	20 MΩ min. between isolated circuits (at 100 VDC)	**Dielectric strength**	510 VAC between isolated circuits for 1 minute at a leakage current of 5 mA max.
I/O power supply method	Supply from the NX bus	**Current capacity of I/O power supply terminal**	IOV: 0.5 A/terminal max., IOG: 0.5 A/terminal max.
NX Unit power consumption	• Connected to a CPU Unit 0.85 W max. • Connected to a Communications Coupler Unit 0.50 W max.	**I/O current consumption**	40 mA max.
Weight	70 g max.		
Circuit layout	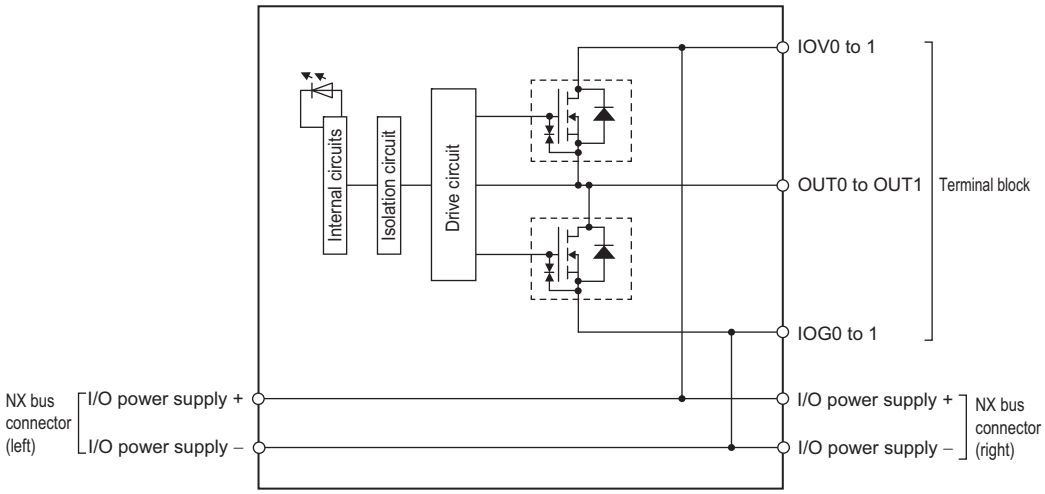 This unit uses a push-pull output circuit.		
Installation orientation and restrictions	Installation orientation: • Connected to a CPU Unit: Possible in upright installation. • Connected to a Communications Coupler Unit: Possible in 6 orientations. Restrictions: No restrictions		
Terminal connection diagram	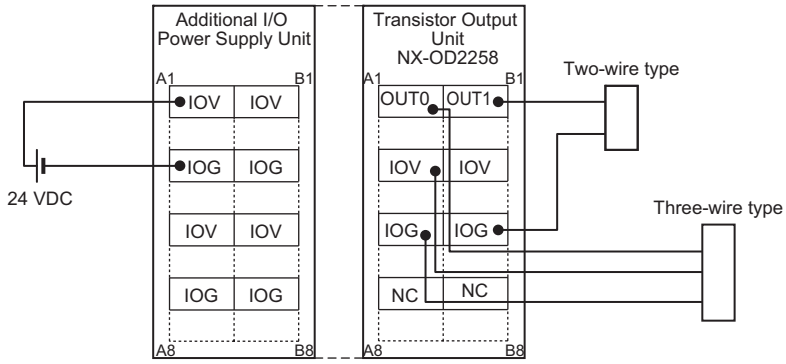 		
Disconnection/ Short-circuit detection	Not supported.	**Protective function**	With load short-circuit protection.

NX-OD3121

Unit name	Transistor Output Unit	**Model**	NX-OD3121
Number of points	4 points	**External connection terminals**	Screwless clamping terminal block (12 terminals)
I/O refreshing method	Selectable Synchronous I/O refreshing or Free-Run refreshing		
Indicators	TS indicator, output indicator 	**Internal I/O common**	NPN
		Rated voltage	12 to 24 VDC
		Operating load voltage range	10.2 to 28.8 VDC
		Maximum value of load current	0.5 A/point, 2 A/Unit
		Maximum inrush current	4.0 A/point, 10 ms max.
		Leakage current	0.1 mA max.
		Residual voltage	1.5 V max.
		ON/OFF response time	0.1 ms max./0.8 ms max.
Dimensions	12 (W) x 100 (H) x 71 (D)	**Isolation method**	Photocoupler isolation
Insulation resistance	20 MΩ min. between isolated circuits (at 100 VDC)	**Dielectric strength**	510 VAC between isolated circuits for 1 minute at a leakage current of 5 mA max.
I/O power supply method	Supply from the NX bus	**Current capacity of I/O power supply terminal**	IOV: 0.5 A/terminal max., IOG: 0.5 A/terminal max.
NX Unit power consumption	• Connected to a CPU Unit or Communication Control Unit 0.90 W max. • Connected to a Communications Coupler Unit 0.55 W max.	**I/O current consumption**	10 mA max.
Weight	70 g max.		
Circuit layout	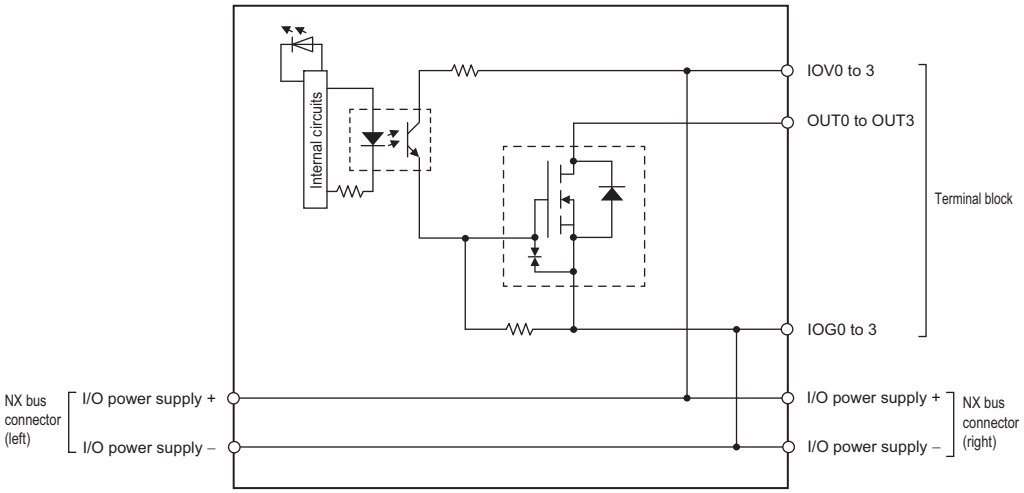 		
Installation orientation and restrictions	Installation orientation: • Connected to a CPU Unit or Communication Control Unit: Possible in upright installation. • Connected to a Communications Coupler Unit: Possible in 6 orientations. Restrictions: No restrictions		
Terminal connection diagram	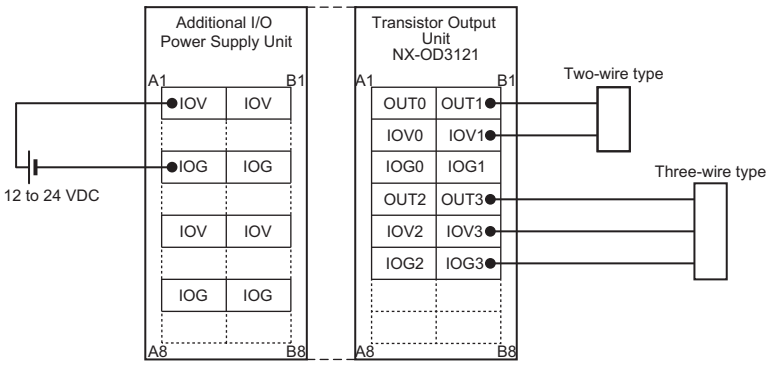 		
Disconnection/ Short-circuit detection	Not supported.	**Protective function**	Not supported.

NX-OD3153

Unit name	Transistor Output Unit	**Model**	NX-OD3153
Number of points	4 points	**External connection terminals**	Screwless clamping terminal block (12 terminals)
I/O refreshing method	Selectable Synchronous I/O refreshing or Free-Run refreshing		
Indicators	TS indicator, output indicator 	**Internal I/O common**	NPN
		Rated voltage	24 VDC
		Operating load voltage range	15 to 28.8 VDC
		Maximum value of load current	0.5 A/point, 2 A/Unit
		Maximum inrush current	4.0 A/point, 10 ms max.
		Leakage current	0.1 mA max.
		Residual voltage	1.5 V max.
		ON/OFF response time	300 ns max./300 ns max.
Dimensions	12 (W) x 100 (H) x 71 (D)	**Isolation method**	Digital isolator isolation
Insulation resistance	20 MΩ min. between isolated circuits (at 100 VDC)	**Dielectric strength**	510 VAC between isolated circuits for 1 minute at a leakage current of 5 mA max.
I/O power supply method	Supply from the NX bus	**Current capacity of I/O power supply terminal**	IOV: 0.5 A/terminal max., IOG: 0.5 A/terminal max.
NX Unit power consumption	• Connected to a CPU Unit or Communication Control Unit 0.90 W max. • Connected to a Communications Coupler Unit 0.50 W max.	**I/O current consumption**	30 mA max.
Weight	70 g max.		
Circuit layout	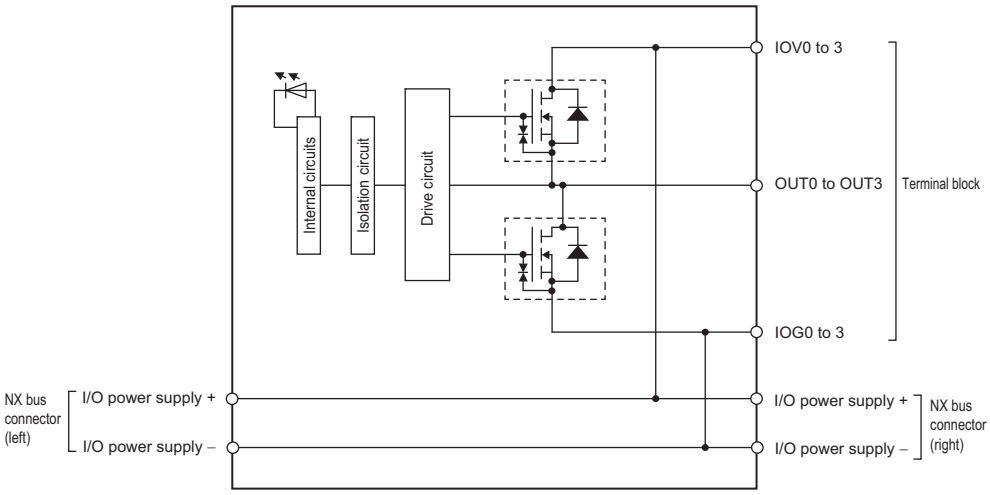 This unit uses a push-pull output circuit.		
Installation orientation and restrictions	Installation orientation: • Connected to a CPU Unit or Communication Control Unit: Possible in upright installation. • Connected to a Communications Coupler Unit: Possible in 6 orientations. Restrictions: No restrictions		
Terminal connection diagram	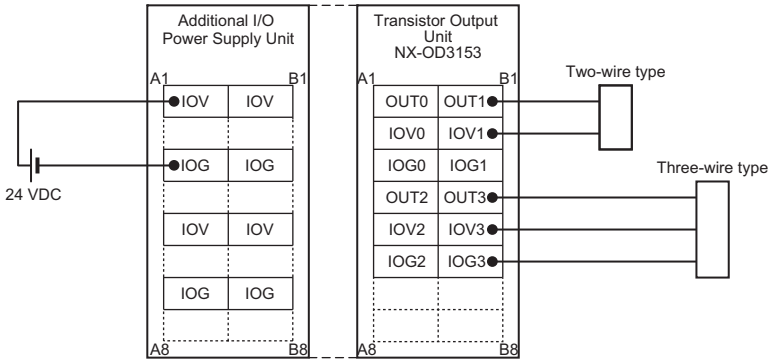 		
Disconnection/ Short-circuit detection	Not supported.	**Protective function**	Not supported.

NX-OD3256

Unit name	Transistor Output Unit	**Model**	NX-OD3256
Number of points	4 points	**External connection terminals**	Screwless clamping terminal block (12 terminals)
I/O refreshing method	Selectable Synchronous I/O refreshing or Free-Run refreshing		
Indicators	TS indicator, output indicator 	**Internal I/O common**	PNP
		Rated voltage	24 VDC
		Operating load voltage range	15 to 28.8 VDC
		Maximum value of load current	0.5 A/point, 2 A/Unit
		Maximum inrush current	4.0 A/point, 10 ms max.
		Leakage current	0.1 mA max.
		Residual voltage	1.5 V max.
		ON/OFF response time	0.5 ms max./1.0 ms max.
Dimensions	12 (W) x 100 (H) x 71 (D)	**Isolation method**	Photocoupler isolation
Insulation resistance	20 MΩ min. between isolated circuits (at 100 VDC)	**Dielectric strength**	510 VAC between isolated circuits for 1 minute at a leakage current of 5 mA max.
I/O power supply method	Supply from the NX bus	**Current capacity of I/O power supply terminal**	IOV: 0.5 A/terminal max., IOG: 0.5 A/terminal max.
NX Unit power consumption	• Connected to a CPU Unit or Communication Control Unit 0.90 W max. • Connected to a Communications Coupler Unit 0.55 W max.	**I/O current consumption**	20 mA max.
Weight	70 g max.		
Circuit layout	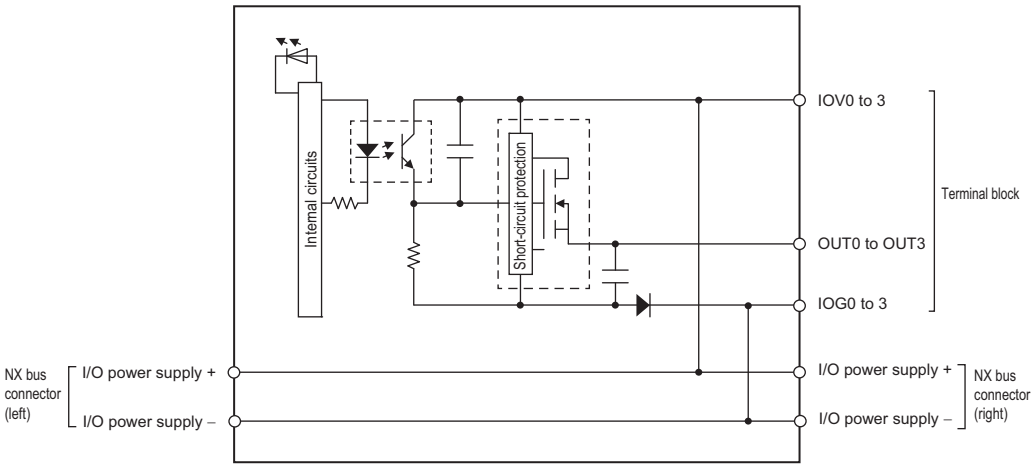 		
Installation orientation and restrictions	Installation orientation: • Connected to a CPU Unit or Communication Control Unit: Possible in upright installation. • Connected to a Communications Coupler Unit: Possible in 6 orientations. Restrictions: No restrictions		
Terminal connection diagram	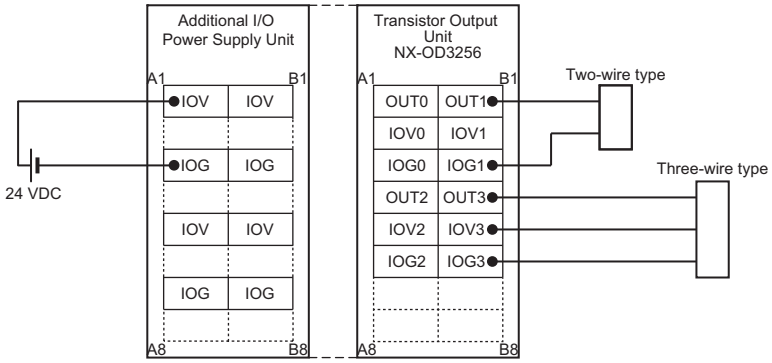 		
Disconnection/ Short-circuit detection	Not supported.	**Protective function**	With load short-circuit protection.

NX-OD3257

Unit name	Transistor Output Unit	**Model**	NX-OD3257
Number of points	4 points	**External connection terminals**	Screwless clamping terminal block (12 terminals)
I/O refreshing method	Selectable Synchronous I/O refreshing or Free-Run refreshing		
Indicators	TS indicator, output indicator 	**Internal I/O common**	PNP
		Rated voltage	24 VDC
		Operating load voltage range	15 to 28.8 VDC
		Maximum value of load current	0.5 A/point, 2 A/Unit
		Maximum inrush current	4.0 A/point, 10 ms max.
		Leakage current	0.1 mA max.
		Residual voltage	1.5 V max.
		ON/OFF response time	300 ns max./300 ns max.
Dimensions	12 (W) x 100 (H) x 71 (D)	**Isolation method**	Digital isolator isolation
Insulation resistance	20 MΩ min. between isolated circuits (at 100 VDC)	**Dielectric strength**	510 VAC between isolated circuits for 1 minute at a leakage current of 5 mA max.
I/O power supply method	Supply from the NX bus	**Current capacity of I/O power supply terminal**	IOV: 0.5 A/terminal max., IOG: 0.5 A/terminal max.
NX Unit power consumption	• Connected to a CPU Unit or Communication Control Unit 0.85 W max. • Connected to a Communications Coupler Unit 0.50 W max.	**I/O current consumption**	40 mA max.
Weight	70 g max.		
Circuit layout	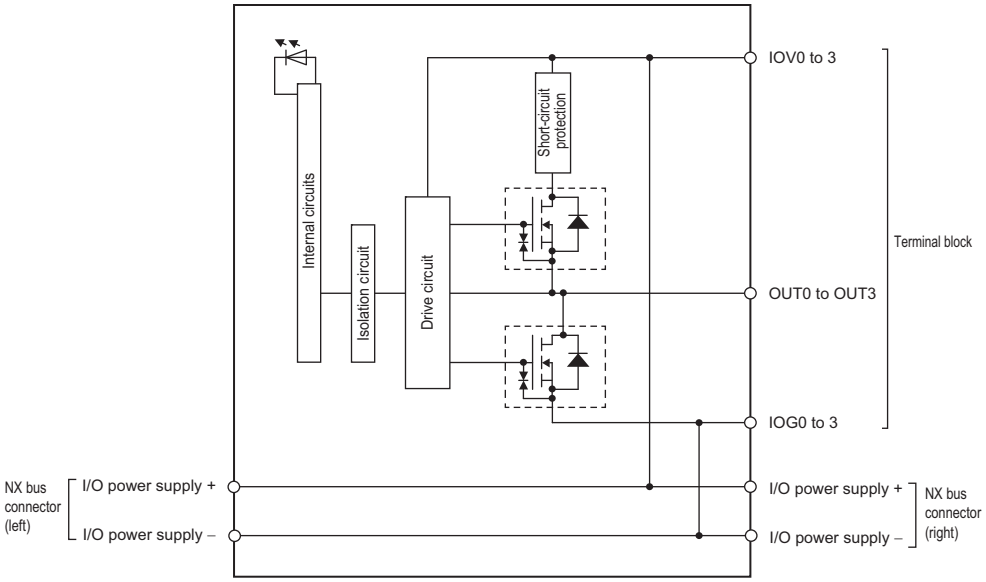 This unit uses a push-pull output circuit.		
Installation orientation and restrictions	Installation orientation: • Connected to a CPU Unit or Communication Control Unit: Possible in upright installation. • Connected to a Communications Coupler Unit: Possible in 6 orientations. Restrictions: No restrictions		
Terminal connection diagram	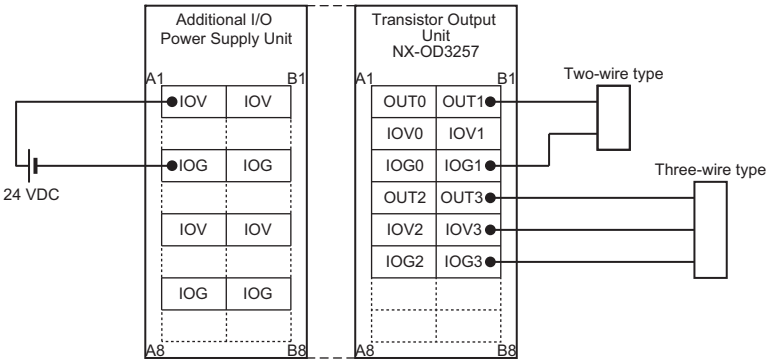 		
Disconnection/ Short-circuit detection	Not supported.	**Protective function**	With load short-circuit protection.

NX-OD3268

Unit name	Transistor Output Unit	**Model**	NX-OD3268
Number of points	4 points	**External connection terminals**	Screwless clamping terminal block (16 terminals)
I/O refreshing method	Switching Synchronous I/O refreshing and Free-Run refreshing		
Indicators	TS indicator, output indicator 	**Internal I/O common**	PNP
		Rated voltage	24 VDC
		Operating load voltage range	15 to 28.8 VDC
		Maximum value of load current	2 A/point, 8 A/Unit
		Maximum inrush current	4.0 A/point, 10 ms max.
		Leakage current	0.1 mA max.
		Residual voltage	1.5 V max.
		ON/OFF response time	0.5 ms max./1.0 ms max.
Dimensions	12 (W) x 100 (H) x 71 (D)	**Isolation method**	Photocoupler isolation
Insulation resistance	20 MΩ min. between isolated circuits (at 100 VDC)	**Dielectric strength**	510 VAC between isolated circuits for 1 minute at a leakage current of 5 mA max.
I/O power supply method	Supply from external source	**Current capacity of I/O power supply terminal**	IOV: 2 A/terminal max., IOG: 2 A/terminal max., COM (+V): 4 A/terminal max., 0V: 4 A/terminal max.
NX Unit power consumption	• Connected to a CPU Unit or Communication Control Unit 0.85 W max. • Connected to a Communications Coupler Unit 0.50 W max.	**Current consumption from I/O power supply**	20 mA max.
Weight	70 g max.		
Circuit layout	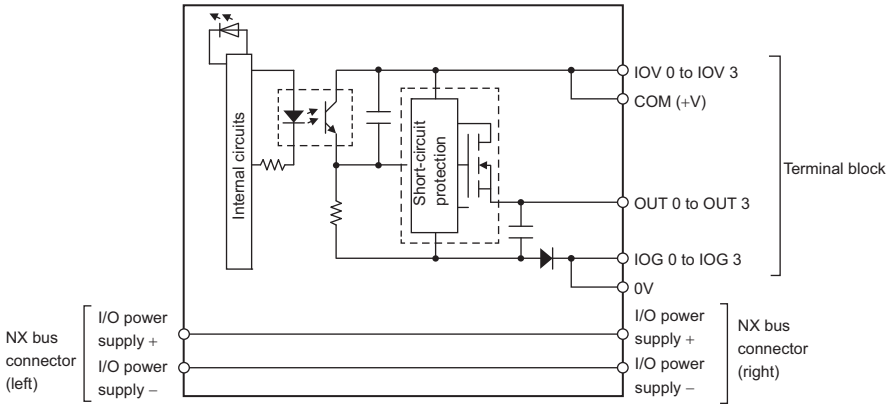 		
Installation orientation and restrictions	Installation orientation: • Connected to a CPU Unit or Communication Control Unit: Possible in upright installation. • Connected to a Communications Coupler Unit: Possible in 6 orientations. Restrictions: No restrictions		
Terminal connection diagram	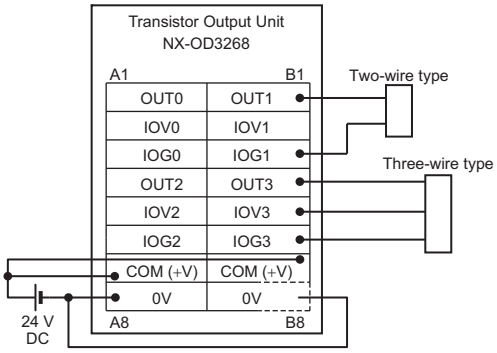 • 0V has 2 terminals, so be sure to wire both terminals. • COM (+V) has 2 terminals, so be sure to wire both terminals.		
Disconnection/ Short-circuit detection	Not supported.	**Protective function**	With load short-circuit protection.

NX-OD4121

Unit name	Transistor Output Unit	**Model**	NX-OD4121
Number of points	8 points	**External connection terminals**	Screwless clamping terminal block (16 terminals)
I/O refreshing method	Selectable Synchronous I/O refreshing or Free-Run refreshing		
Indicators	TS indicator, output indicator OD4121 TS 0 1 2 3 4 5 6 7	**Internal I/O common**	NPN
		Rated voltage	12 to 24 VDC
		Operating load voltage range	10.2 to 28.8 VDC
		Maximum value of load current	0.5 A/point, 4 A/Unit
		Maximum inrush current	4.0 A/point, 10 ms max.
		Leakage current	0.1 mA
		Residual voltage	1.5 V max.
		ON/OFF response time	0.1 ms max./0.8 ms max.
Dimensions	12 (W) x 100 (H) x 71 (D)	**Isolation method**	Photocoupler isolation
Insulation resistance	20 MΩ min. between isolated circuits (at 100 VDC)	**Dielectric strength**	510 VAC between isolated circuits for 1 minute at a leakage current of 5 mA max.
I/O power supply method	Supply from the NX bus	**Current capacity of I/O power supply terminal**	IOV: 0.5 A/terminal max.
NX Unit power consumption	• Connected to a CPU Unit or Communication Control Unit 0.90 W max. • Connected to a Communications Coupler Unit 0.55 W max.	**I/O current consumption**	10 mA max.
Weight	70 g max.		
Circuit layout	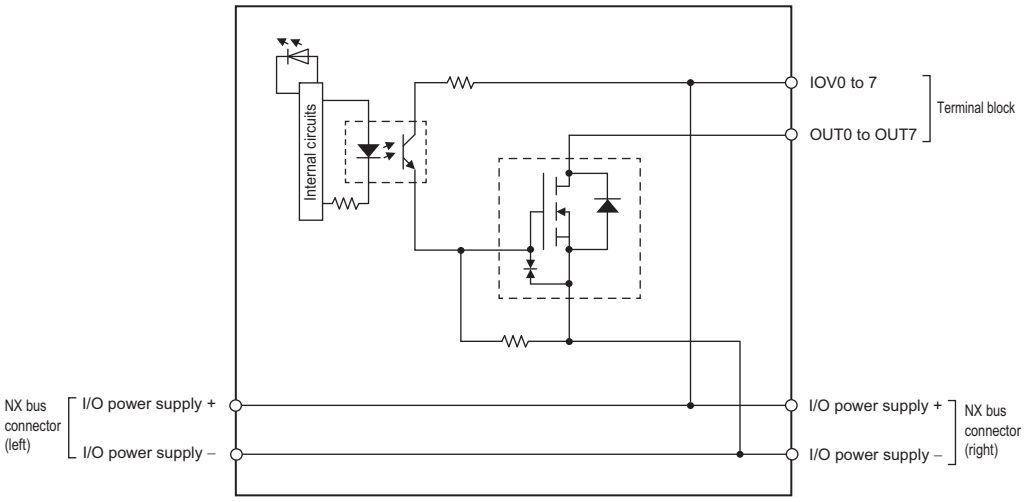		
Installation orientation and restrictions	Installation orientation: • Connected to a CPU Unit or Communication Control Unit: Possible in upright installation. • Connected to a Communications Coupler Unit: Possible in 6 orientations. Restrictions: No restrictions		
Terminal connection diagram	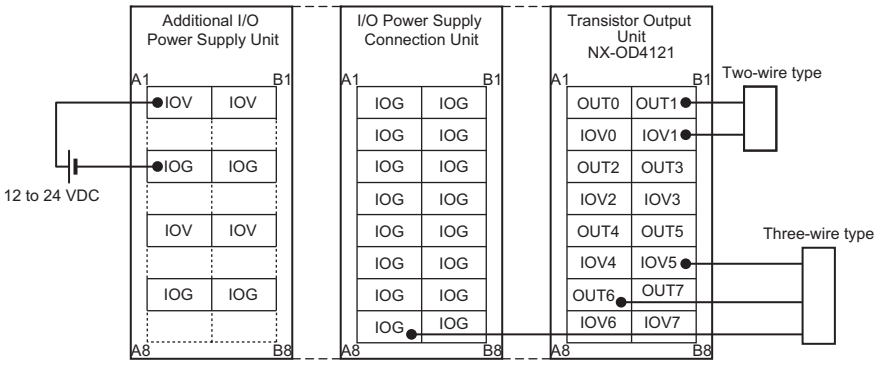		
Disconnection/ Short-circuit detection	Not supported.	**Protective function**	Not supported.

NX-OD4256

Unit name	Transistor Output Unit	**Model**	NX-OD4256
Number of points	8 points	**External connection terminals**	Screwless clamping terminal block (16 terminals)
I/O refreshing method	Selectable Synchronous I/O refreshing or Free-Run refreshing		
Indicators	TS indicator, output indicator 	**Internal I/O common**	PNP
		Rated voltage	24 VDC
		Operating load voltage range	15 to 28.8 VDC
		Maximum value of load current	0.5 A/point, 4 A/Unit
		Maximum inrush current	4.0 A/point, 10 ms max.
		Leakage current	0.1 mA
		Residual voltage	1.5 V max.
		ON/OFF response time	0.5 ms max./1.0 ms max.
Dimensions	12 (W) x 100 (H) x 71 (D)	**Isolation method**	Photocoupler isolation
Insulation resistance	20 MΩ min. between isolated circuits (at 100 VDC)	**Dielectric strength**	510 VAC between isolated circuits for 1 minute at a leakage current of 5 mA max.
I/O power supply method	Supply from the NX bus	**Current capacity of I/O power supply terminal**	IOG: 0.5 A/terminal max.
NX Unit power consumption	• Connected to a CPU Unit or Communication Control Unit 1.00 W max. • Connected to a Communications Coupler Unit 0.65 W max.	**I/O current consumption**	30 mA max.
Weight	70 g max.		
Circuit layout	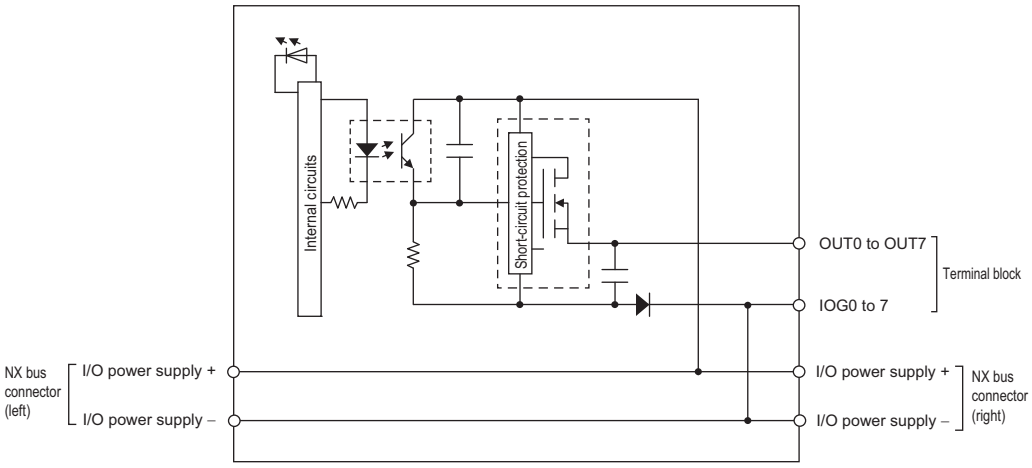 		
Installation orientation and restrictions	Installation orientation: • Connected to a CPU Unit or Communication Control Unit: Possible in upright installation. • Connected to a Communications Coupler Unit: Possible in 6 orientations. Restrictions: No restrictions		
Terminal connection diagram	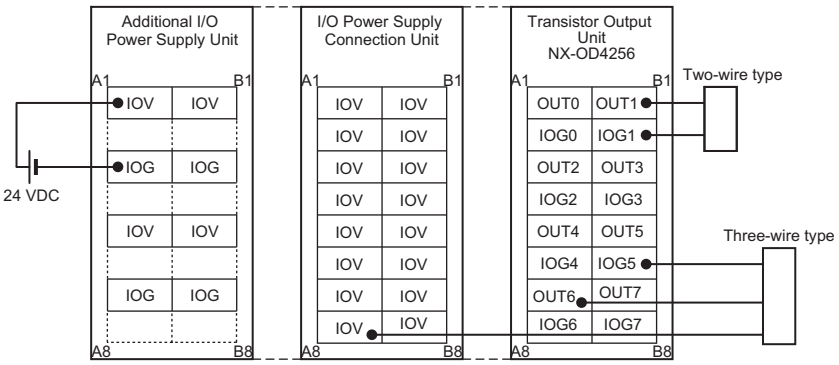 		
Disconnection/ Short-circuit detection	Not supported.	**Protective function**	With load short-circuit protection.

NX-OD5121

Unit name	Transistor Output Unit	**Model**	NX-OD5121
Number of points	16 points	**External connection terminals**	Screwless clamping terminal block (16 terminals)
I/O refreshing method	Selectable Synchronous I/O refreshing or Free-Run refreshing		
Indicators	TS indicator, output indicator 	**Internal I/O common**	NPN
		Rated voltage	12 to 24 VDC
		Operating load voltage range	10.2 to 28.8 VDC
		Maximum value of load current	0.5 A/point, 4 A/Unit
		Maximum inrush current	4.0 A/point, 10 ms max.
		Leakage current	0.1 mA max.
		Residual voltage	1.5 V max.
		ON/OFF response time	0.1 ms max./0.8 ms max.
Dimensions	12 (W) x 100 (H) x 71 (D)	**Isolation method**	Photocoupler isolation
Insulation resistance	20 MΩ min. between isolated circuits (at 100 VDC)	**Dielectric strength**	510 VAC between isolated circuits for 1 minute at a leakage current of 5 mA max.
I/O power supply method	Supply from the NX bus	**Current capacity of I/O power supply terminal**	Without I/O power supply terminals
NX Unit power consumption	• Connected to a CPU Unit or Communication Control Unit 1.00 W max. • Connected to a Communications Coupler Unit 0.65 W max.	**I/O current consumption**	20 mA max.
Weight	70 g max.		
Circuit layout	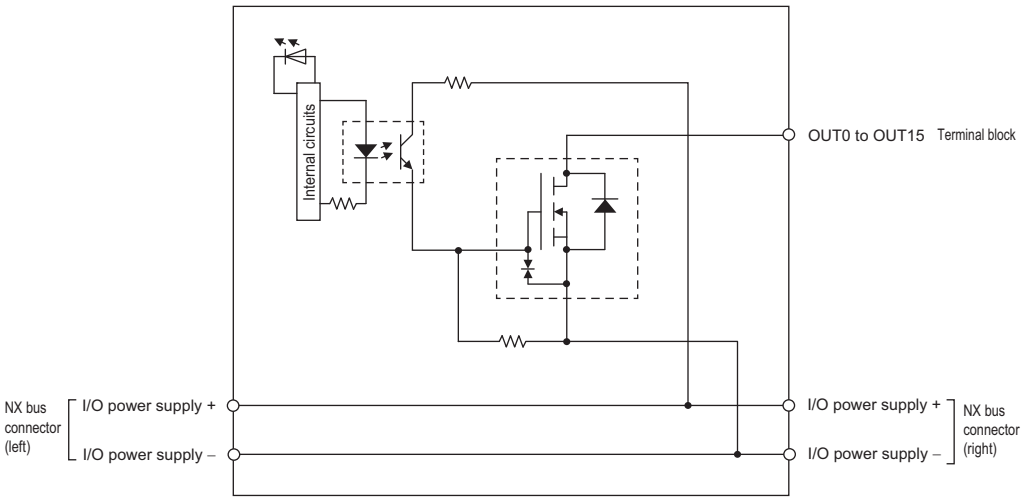 		
Installation orientation and restrictions	Installation orientation: • Connected to a CPU Unit or Communication Control Unit: Possible in upright installation. • Connected to a Communications Coupler Unit: Possible in 6 orientations. Restrictions: No restrictions		
Terminal connection diagram	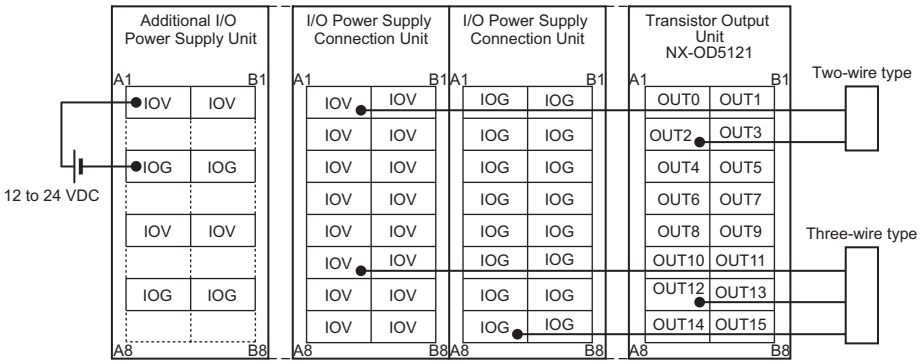 		
Disconnection/ Short-circuit detection	Not supported.	**Protective function**	Not supported.

NX-OD5256

Unit name	Transistor Output Unit	**Model**	NX-OD5256
Number of points	16 points	**External connection terminals**	Screwless clamping terminal block (16 terminals)
I/O refreshing method	Selectable Synchronous I/O refreshing or Free-Run refreshing		
Indicators	TS indicator, output indicator 	**Internal I/O common**	PNP
		Rated voltage	24 VDC
		Operating load voltage range	15 to 28.8 VDC
		Maximum value of load current	0.5 A/point, 4 A/Unit
		Maximum inrush current	4.0 A/point, 10 ms max.
		Leakage current	0.1 mA max.
		Residual voltage	1.5 V max.
		ON/OFF response time	0.5 ms max./1.0 ms max.
Dimensions	12 (W) x 100 (H) x 71 (D)	**Isolation method**	Photocoupler isolation
Insulation resistance	20 MΩ min. between isolated circuits (at 100 VDC)	**Dielectric strength**	510 VAC between isolated circuits for 1 minute at a leakage current of 5 mA max.
I/O power supply method	Supply from the NX bus	**Current capacity of I/O power supply terminal**	Without I/O power supply terminals
NX Unit power consumption	• Connected to a CPU Unit or Communication Control Unit 1.10 W max. • Connected to a Communications Coupler Unit 0.70 W max.	**I/O current consumption**	40 mA max.
Weight	70 g max.		
Circuit layout	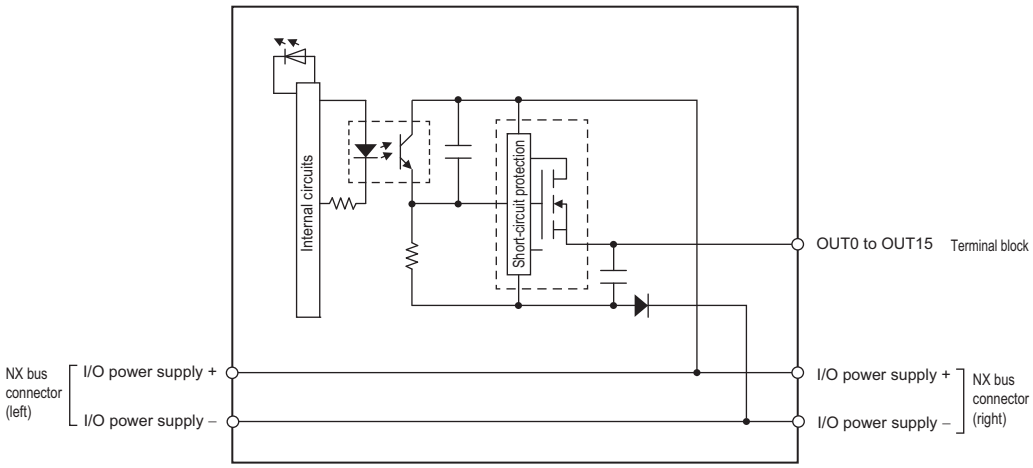 		
Installation orientation and restrictions	Installation orientation: • Connected to a CPU Unit or Communication Control Unit: Possible in upright installation. • Connected to a Communications Coupler Unit: Possible in 6 orientations. Restrictions: No restrictions		
Terminal connection diagram	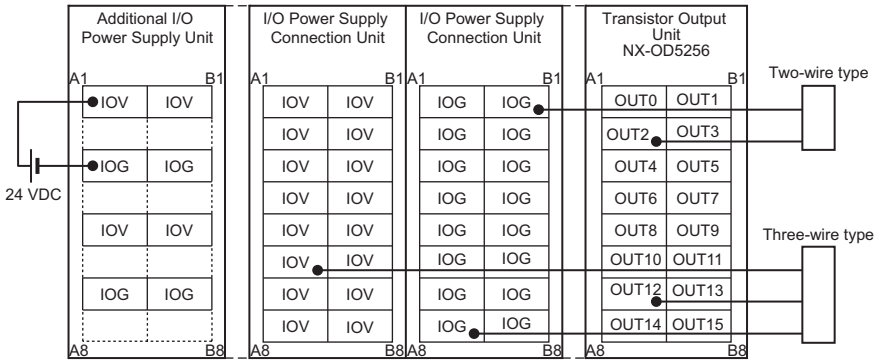 		
Disconnection/ Short-circuit detection	Not supported.	**Protective function**	With load short-circuit protection.

● Transistor Output Unit (M3 Screw Terminal Block, 30 mm Width)
NX-OD5121-1

Unit name	Transistor Output Unit	**Model**	NX-OD5121-1
Number of points	16 points	**External connection terminals**	M3 screw terminal block (18 terminals)
I/O refreshing method	Switching Synchronous I/O refreshing and Free-Run refreshing		
Indicators	TS indicator, output indicator 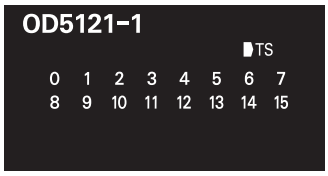 	**Internal I/O common**	NPN
		Rated voltage	12 to 24 VDC
		Operating load voltage range	10.2 to 28.8 VDC
		Maximum value of load current	0.5 A/point, 5 A/Unit
		Maximum inrush current	4.0 A/point, 10 ms max.
		Leakage current	0.1 mA max.
		Residual voltage	1.5 V max.
		ON/OFF response time	0.1 ms max./0.8 ms max.
Dimensions	30 (W) x 100 (H) x 71 (D)	**Isolation method**	Photocoupler isolation
Insulation resistance	20 MΩ min. between isolated circuits (at 100 VDC)	**Dielectric strength**	510 VAC between isolated circuits for 1 minute at a leakage current of 5 mA max.
I/O power supply method	Supply from the external source	**Current capacity of I/O power supply terminal**	Without I/O power supply terminals
NX Unit power consumption	• Connected to a CPU Unit or Communication Control Unit 0.90 W max. • Connected to a Communications Coupler Unit 0.60 W max.	**Current consumption from I/O power supply**	30 mA max.
Weight	125 g max.		
Circuit layout	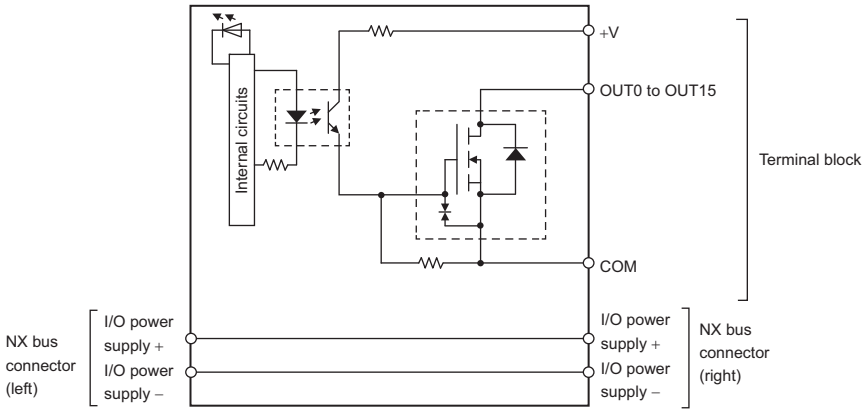 		
Installation orientation and restrictions	Installation orientation: • Connected to a CPU Unit or Communication Control Unit: Possible in upright installation. • Connected to a Communications Coupler Unit: Possible in 6 orientations. Restrictions: No restrictions		
Terminal connection diagram	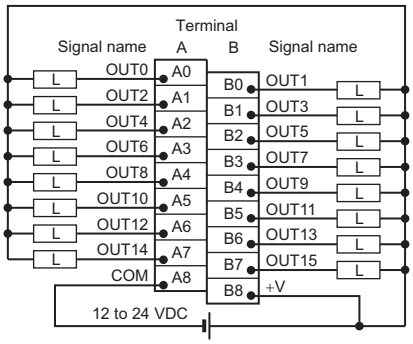 		
Disconnection/ Short-circuit detection	Not supported.	**Protective function**	Not supported.

NX-OD5256-1

Unit name	Transistor Output Unit	**Model**	NX-OD5256-1
Number of points	16 points	**External connection terminals**	M3 screw terminal block (18 terminals)
I/O refreshing method	Switching Synchronous I/O refreshing and Free-Run refreshing		
Indicators	TS indicator, output indicator 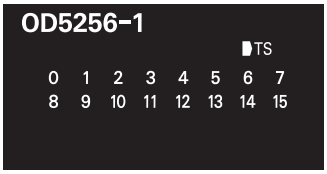 	**Internal I/O common**	PNP
		Rated voltage	24 VDC
		Operating load voltage range	20.4 to 28.8 VDC
		Maximum value of load current	0.5 A/point, 5 A/Unit
		Maximum inrush current	4.0 A/point, 10 ms max.
		Leakage current	0.1 mA max.
		Residual voltage	1.5 V max.
		ON/OFF response time	0.5 ms max./1.0 ms max.
Dimensions	30 (W) x 100 (H) x 71 (D)	**Isolation method**	Photocoupler isolation
Insulation resistance	20 MΩ min. between isolated circuits (at 100 VDC)	**Dielectric strength**	510 VAC between isolated circuits for 1 minute at a leakage current of 5 mA max.
I/O power supply method	Supply from external source	**Current capacity of I/O power supply terminal**	Without I/O power supply terminals
NX Unit power consumption	• Connected to a CPU Unit or Communication Control Unit 0.95 W max. • Connected to a Communications Coupler Unit 0.65 W max.	**Current consumption from I/O power supply**	30 mA max.
Weight	125 g max.		
Circuit layout	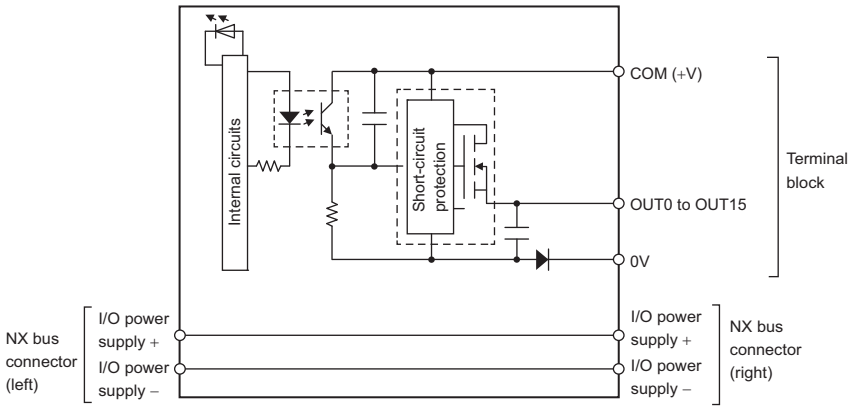 		
Installation orientation and restrictions	Installation orientation: • Connected to a CPU Unit or Communication Control Unit: Possible in upright installation. • Connected to a Communications Coupler Unit: Possible in 6 orientations. Restrictions: No restrictions		
Terminal connection diagram	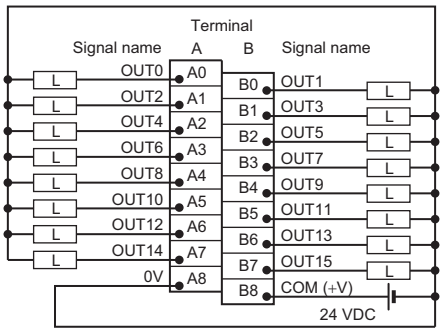 		
Disconnection/ Short-circuit detection	Not supported.	**Protective function**	With load short-circuit protection.

● Transistor Output Unit (MIL Connector, 30 mm Width)
NX-OD5121-5

Unit name	Transistor Output Unit	**Model**	NX-OD5121-5
Number of points	16 points	**External connection terminals**	MIL connector (20 terminals)
I/O refreshing method	Switching Synchronous I/O refreshing and Free-Run refreshing		
Indicators	TS indicator, output indicator 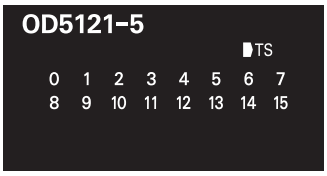 	**Internal I/O common**	NPN
		Rated voltage	12 to 24 VDC
		Operating load voltage range	10.2 to 28.8 VDC
		Maximum value of load current	0.5 A/point, 2 A/Unit
		Maximum inrush current	4.0 A/point, 10 ms max.
		Leakage current	0.1 mA max.
		Residual voltage	1.5 V max.
		ON/OFF response time	0.1 ms max./0.8 ms max.
Dimensions	30 (W) x 100 (H) x 71 (D)	**Isolation method**	Photocoupler isolation
Insulation resistance	20 MΩ min. between isolated circuits (at 100 VDC)	**Dielectric strength**	510 VAC between isolated circuits for 1 minute at a leakage current of 5 mA max.
I/O power supply method	Supply from external source	**Current capacity of I/O power supply terminal**	Without I/O power supply terminals
NX Unit power consumption	• Connected to a CPU Unit or Communication Control Unit 0.95 W max. • Connected to a Communications Coupler Unit 0.60 W max.	**Current consumption from I/O power supply**	30 mA max.
Weight	80 g max.		
Circuit layout	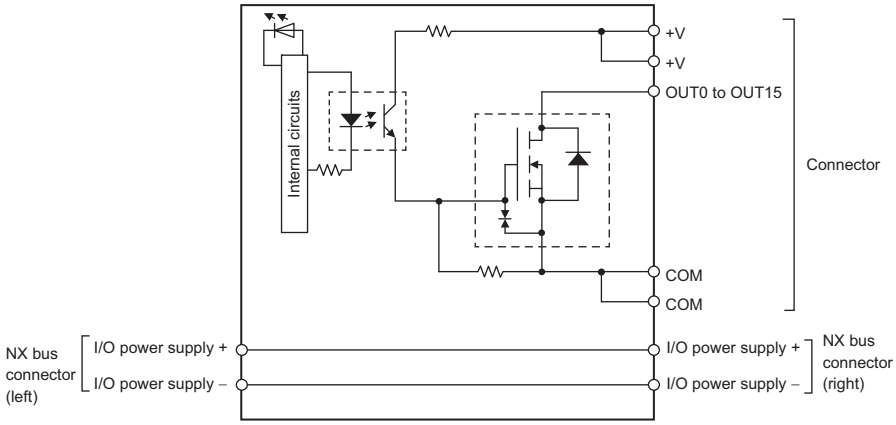 		
Installation orientation and restrictions	Installation orientation: • Connected to a CPU Unit or Communication Control Unit: Possible in upright installation. • Connected to a Communications Coupler Unit: Possible in 6 orientations. Restrictions: No restrictions		
Terminal connection diagram	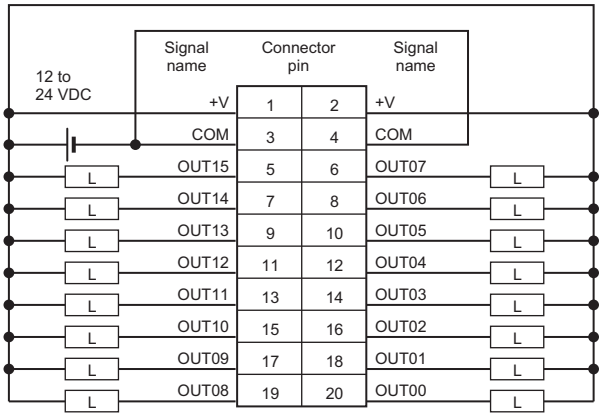 • Be sure to wire both pins 3 and 4 (COM). • Be sure to wire both pins 1 and 2 (+V).		
Disconnection/Short-circuit detection	Not supported.	**Protective function**	Not supported.

NX-OD5256-5

Unit name	Transistor Output Unit	**Model**	NX-OD5256-5
Number of points	16 points	**External connection terminals**	MIL connector (20 terminals)
I/O refreshing method	Switching Synchronous I/O refreshing and Free-Run refreshing		
Indicators	TS indicator, output indicator 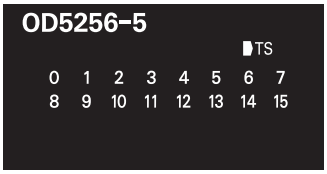 	**Internal I/O common**	PNP
		Rated voltage	24 VDC
		Operating load voltage range	20.4 to 28.8 VDC
		Maximum value of load current	0.5 A/point, 2 A/Unit
		Maximum inrush current	4.0 A/point, 10 ms max.
		Leakage current	0.1 mA max.
		Residual voltage	1.5 V max.
		ON/OFF response time	0.5 ms max./1.0 ms max.
Dimensions	30 (W) x 100 (H) x 71 (D)	**Isolation method**	Photocoupler isolation
Insulation resistance	20 MΩ min. between isolated circuits (at 100 VDC)	**Dielectric strength**	510 VAC between isolated circuits for 1 minute at a leakage current of 5 mA max.
I/O power supply method	Supplied from external source.	**Current capacity of I/O power supply terminal**	Without I/O power supply terminals
NX Unit power consumption	• Connected to a CPU Unit or Communication Control Unit 1.00 W max. • Connected to a Communications Coupler Unit 0.70 W max.	**Current consumption from I/O power supply**	40 mA max.
Weight	85 g max.		
Circuit layout	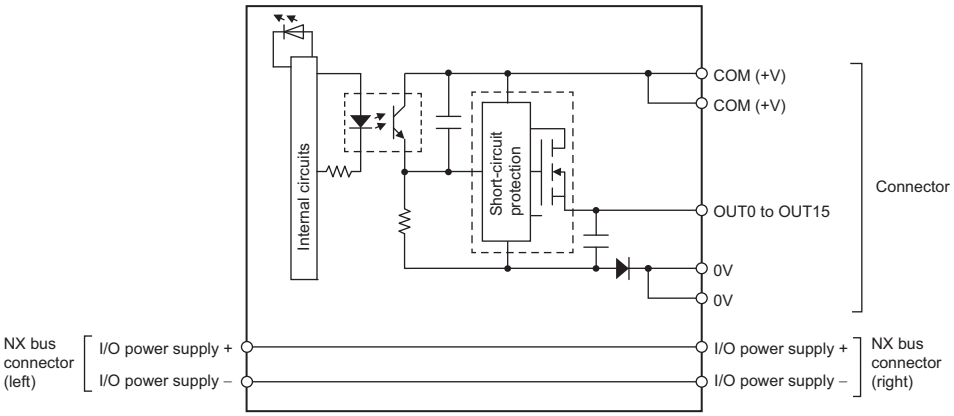 		
Installation orientation and restrictions	Installation orientation: • Connected to a CPU Unit or Communication Control Unit: Possible in upright installation. • Connected to a Communications Coupler Unit: Possible in 6 orientations. Restrictions: No restrictions		
Terminal connection diagram	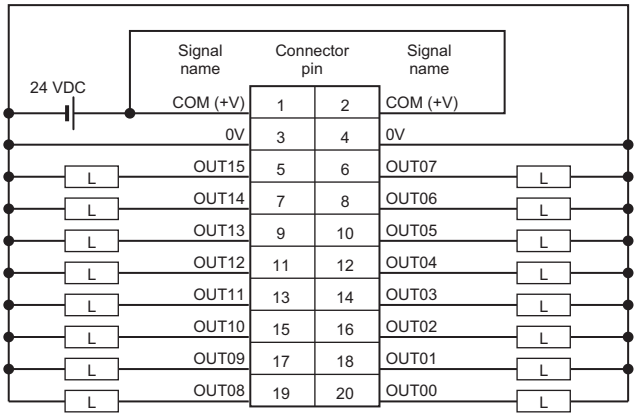 • Be sure to wire both pins 1 and 2 (COM (+V)). • Be sure to wire both pins 3 and 4 (0V).		
Disconnection/Short-circuit detection	Not supported.	**Protective function**	With load short-circuit protection.

NX-OD6121-5

Unit name	Transistor Output Unit	**Model**	NX-OD6121-5
Number of points	32 points	**External connection terminals**	MIL connector (40 terminals)
I/O refreshing method	Switching Synchronous I/O refreshing and Free-Run refreshing		
Indicators	TS indicator, output indicator OD6121-5 TS 0 1 2 3 4 5 6 7 8 9 10 11 12 13 14 15 16 17 18 19 20 21 22 23 24 25 26 27 28 29 30 31	**Internal I/O common**	NPN
		Rated voltage	12 to 24 VDC
		Operating load voltage range	10.2 to 28.8 VDC
		Maximum value of load current	0.5 A/point, 2 A/common, 4 A/Unit
		Maximum inrush current	4.0 A/point, 10 ms max.
		Leakage current	0.1 mA max.
		Residual voltage	1.5 V max.
		ON/OFF response time	0.1 ms max./0.8 ms max.
Dimensions	30 (W) x 100 (H) x 71 (D)	**Isolation method**	Photocoupler isolation
Insulation resistance	20 MΩ min. between isolated circuits (at 100 VDC)	**Dielectric strength**	510 VAC between isolated circuits for 1 minute at a leakage current of 5 mA max.
I/O power supply method	Supply from external source	**Current capacity of I/O power supply terminal**	Without I/O power supply terminals
NX Unit power consumption	• Connected to a CPU Unit or Communication Control Unit 1.00 W max. • Connected to a Communications Coupler Unit 0.80 W max.	**Current consumption from I/O power supply**	50 mA max.
Weight	90 g max.		
Circuit layout	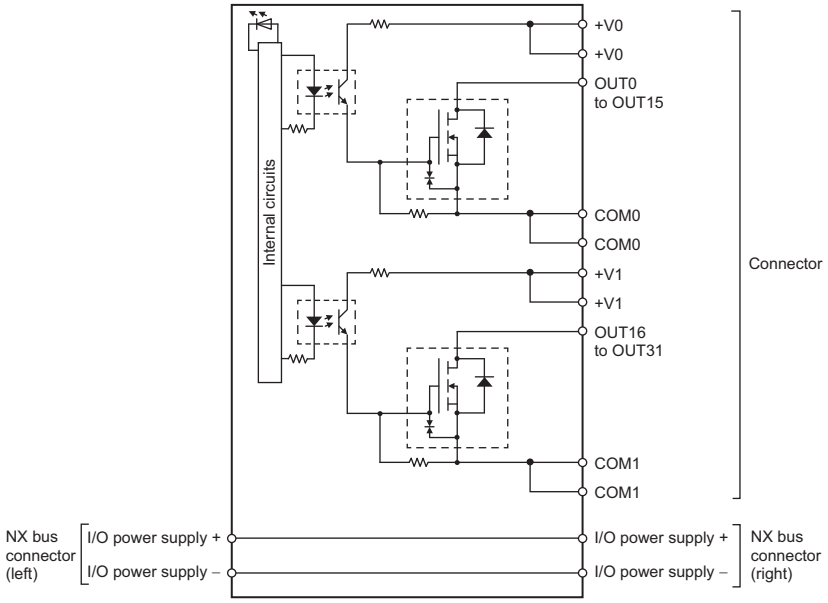		
Installation orientation and restrictions	Installation orientation: • Connected to a CPU Unit or Communication Control Unit: Possible in upright installation. • Connected to a Communications Coupler Unit: Possible in 6 orientations. Restrictions: No restrictions		

Terminal connection diagram	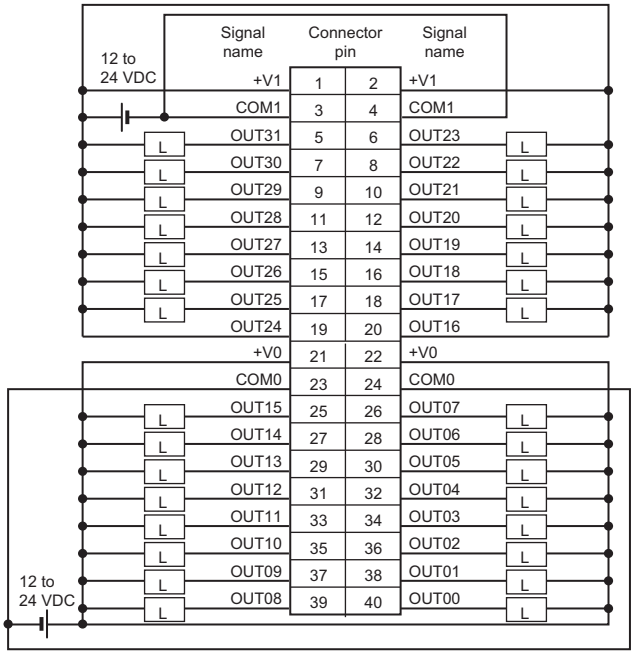 • Be sure to wire both pins 21 and 22 (+V0). • Be sure to wire both pins 23 and 24 (COM0). • Be sure to wire both pins 1 and 2 (+V1). • Be sure to wire both pins 3 and 4 (COM1).		
Disconnection/Short-circuit detection	Not supported.	**Protective function**	Not supported.

NX-OD6256-5

Unit name	Transistor Output Unit	**Model**	NX-OD6256-5
Number of points	32 points	**External connection terminals**	MIL connector (40 terminals)
I/O refreshing method	Switching Synchronous I/O refreshing and Free-Run refreshing		
Indicators	TS indicator, output indicator 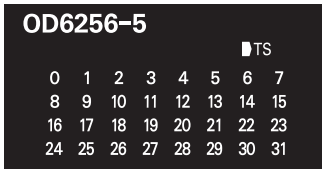 	**Internal I/O common**	PNP
		Rated voltage	24 VDC
		Operating load voltage range	20.4 to 28.8 VDC
		Maximum value of load current	0.5 A/point, 2 A/common, 4 A/Unit
		Maximum inrush current	4.0 A/point, 10 ms max.
		Leakage current	0.1 mA max.
		Residual voltage	1.5 V max.
		ON/OFF response time	0.5 ms max./1.0 ms max.
Dimensions	30 (W) x 100 (H) x 71 (D)	**Isolation method**	Photocoupler isolation
Insulation resistance	20 MΩ min. between isolated circuits (at 100 VDC)	**Dielectric strength**	510 VAC between isolated circuits for 1 minute at a leakage current of 5 mA max.
I/O power supply method	Supply from external source	**Current capacity of I/O power supply terminal**	Without I/O power supply terminals
NX Unit power consumption	• Connected to a CPU Unit or Communication Control Unit 1.30 W max. • Connected to a Communications Coupler Unit 1.00 W max.	**Current consumption from I/O power supply**	80 mA max.
Weight	95 g max.		
Circuit layout	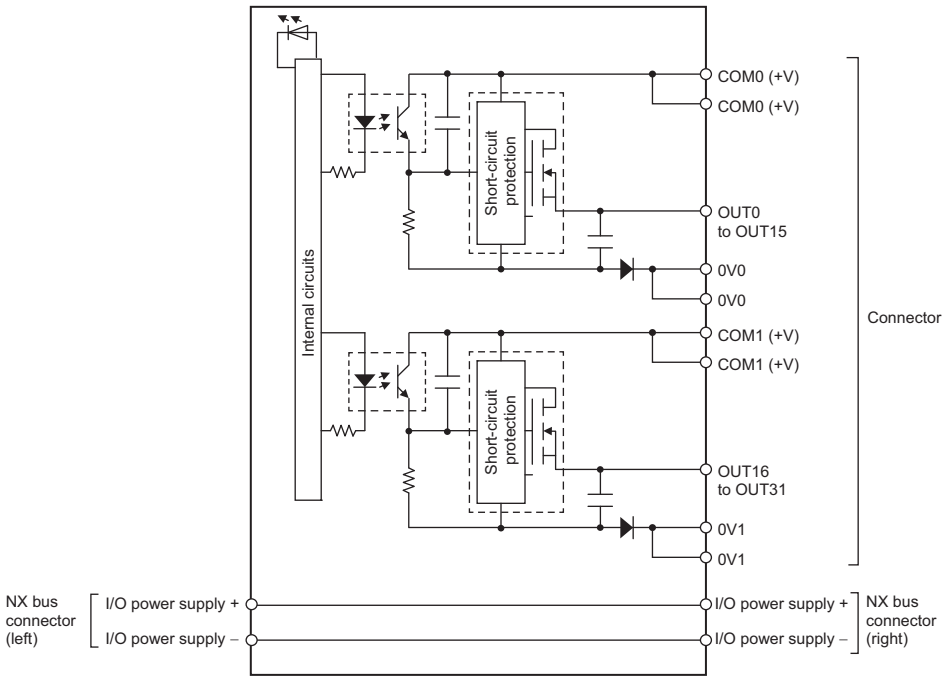 		
Installation orientation and restrictions	Installation orientation: • Connected to a CPU Unit or Communication Control Unit: Possible in upright installation. • Connected to a Communications Coupler Unit: Possible in 6 orientations. Restrictions: No restrictions		

Terminal connection diagram	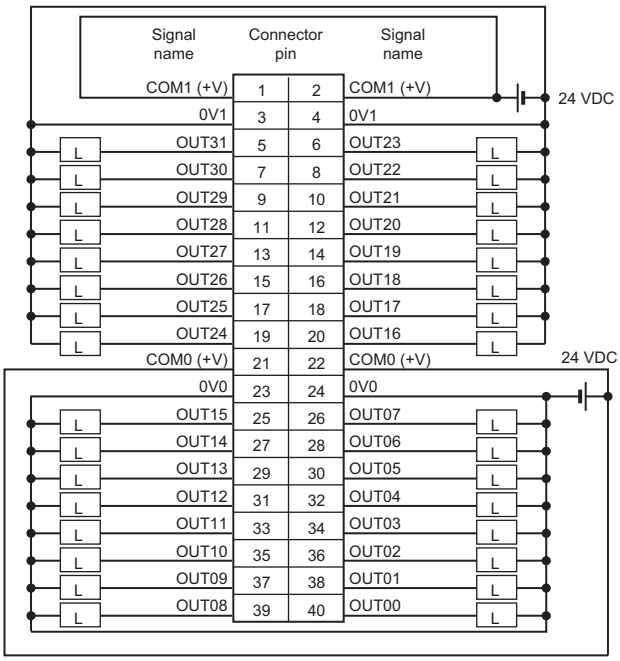 • Be sure to wire both pins 21 and 22 (COM0 (+V)). • Be sure to wire both pins 1 and 2 (COM1 (+V)). • Be sure to wire both pins 23 and 24 (0V0). • Be sure to wire both pins 3 and 4 (0V1).		
Disconnection/Short-circuit detection	Not supported.	**Protective function**	With load short-circuit protection.

● Transistor Output Unit (Fujitsu Connector, 30 mm Width)
NX-OD6121-6

Unit name	Transistor Output Unit	**Model**	NX-OD6121-6
Number of points	32 points	**External connection terminals**	Fujitsu connector (40 terminals)
I/O refreshing method	Switching Synchronous I/O refreshing and Free-Run refreshing		
Indicators	TS indicator, output indicator 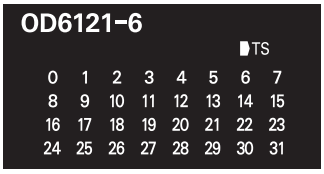 	**Internal I/O common**	NPN
		Rated voltage	12 to 24 VDC
		Operating load voltage range	10.2 to 28.8 VDC
		Maximum value of load current	0.5 A/point, 2 A/common, 4 A/Unit
		Maximum inrush current	4.0 A/point, 10 ms max.
		Leakage current	0.1 mA max.
		Residual voltage	1.5 V max.
		ON/OFF response time	0.1 ms max./0.8 ms max.
Dimensions	30 (W) x 100 (H) x 71 (D)	**Isolation method**	Photocoupler isolation
Insulation resistance	20 MΩ min. between isolated circuits (at 100 VDC)	**Dielectric strength**	510 VAC between isolated circuits for 1 minute at a leakage current of 5 mA max.
I/O power supply method	Supply from external source	**Current capacity of I/O power supply terminal**	Without I/O power supply terminals
NX Unit power consumption	• Connected to a CPU Unit or Communication Control Unit 1.10 W max. • Connected to a Communications Coupler Unit 0.80 W max.	**Current consumption from I/O power supply**	50 mA max.
Weight	90 g max.		
Circuit layout	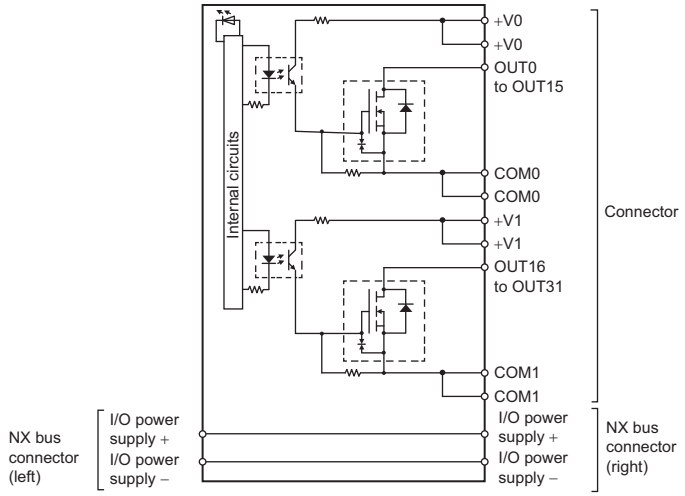 		
Installation orientation and restrictions	Installation orientation: • Connected to a CPU Unit or Communication Control Unit: Possible in upright installation. • Connected to a Communications Coupler Unit: Possible in 6 orientations. Restrictions: No restrictions		
Terminal connection diagram	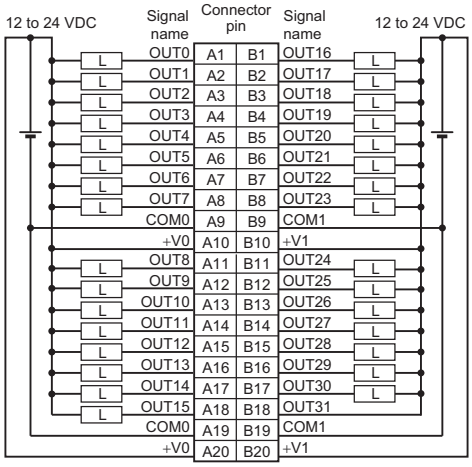 • Be sure to wire both pins A9 and A19 (COM0). • Be sure to wire both pins B9 and B19 (COM1). • Be sure to wire both pins A10 and A20 (+V0). • Be sure to wire both pins B10 and B20 (+V1).		
Disconnection/ Short-circuit detection	Not supported.	**Protective function**	Not supported.

● Relay Output Unit (Screwless Clamping Terminal Block, 12 mm Width) NX-OC2633

Unit name	Relay Output Units	**Model**	NX-OC2633
Number of points	2 points, independent contacts	**External connection terminals**	Screwless clamping terminal block (8 terminals)
I/O refreshing method	Free-Run refreshing		
Indicators	TS indicator, output indicator 	**Relay type**	N.O. contact
		Maximum switching capacity	250 VAC/2 A (cosϕ = 1), 250 VAC/2 A (cosϕ = 0.4), 24 VDC/2 A, 4 A/Unit
		Minimum switching capacity	5 VDC, 1 mA
Relay service life	Electrical: 100,000 operations* Mechanical: 20,000,000 operations	**ON/OFF response time**	15 ms max./15 ms max.
Dimensions	12 (W) x 100 (H) x 71 (D)	**Isolation method**	Relay isolation
Insulation resistance	Between A1/B1 terminals and A3/B3 terminals: 20 MΩ min. (500 VDC) Between the external terminals and internal circuits: 20 MΩ min. (500 VDC) Between the internal circuit and GR terminal: 20 MΩ min. (100 VDC) Between the external terminals and GR terminal: 20 MΩ min. (500 VDC)	**Dielectric strength**	Between A1/B1 terminals and A3/B3 terminals: 2300 VAC for 1 min at a leakage current of 5 mA max. Between the external terminals and GR terminal: 2300 VAC for 1 min at a leakage current of 5 mA max. Between the external terminals and internal circuits: 2300 VAC for 1 min at a leakage current of 5 mA max. Between the internal circuit and GR terminal: 510 VAC for 1 min at a leakage current of 5 mA max.
Vibration resistance	Conforms to IEC60068-2-6. 5 to 8.4 Hz with amplitude of 3.5 mm, 8.4 to 150 Hz, acceleration of 9.8 m/s^2 100 min each in X, Y, and Z directions (10 sweeps of 10 min each = 100 min total)	**Shock resistance**	100 m/s^2, 3 times each in X, Y, and Z directions
I/O power supply method	Supply from external source	**Current capacity of I/O power supply terminal**	Without I/O power supply terminals
NX Unit power consumption	• Connected to a CPU Unit or Communication Control Unit 1.20 W max. • Connected to a Communications Coupler Unit 0.80 W max.	**I/O current consumption**	No consumption
Weight	65 g max.		
Circuit layout	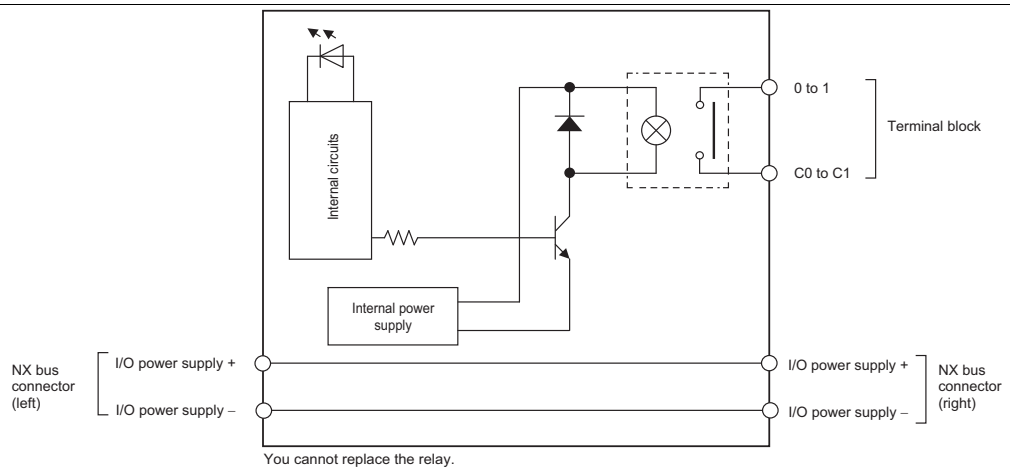		
Installation orientation and restrictions	Installation orientation: • Connected to a CPU Unit or Communication Control Unit: Possible in upright installation. • Connected to a Communications Coupler Unit: Possible in 6 orientations. Restrictions: No restrictions		
Terminal connection diagram	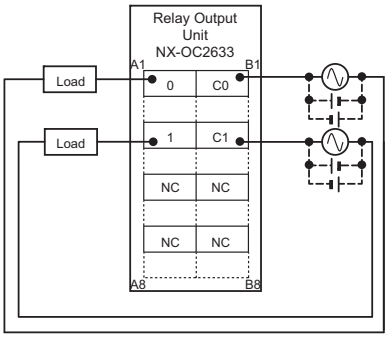		
Disconnection/ Short-circuit detection	Not supported.	**Protective function**	Not supported.

* Electrical service life will vary depending on the current value. Refer to "NX-series Digital I/O Units User's Manual" for details.

NX-OC2733

Unit name	Relay Output Unit	**Model**	NX-OC2733
Number of points	2 points, independent contacts	**External connection terminals**	Screwless clamping terminal block (8 terminals)
I/O refreshing method	Free-Run refreshing		
Indicators	TS indicator, output indicator 	**Maximum switching capacity**	250 VAC/2 A (cosϕ = 1), 250 VAC/2 A (cosϕ = 0.4), 24 VDC/2 A, 4 A/Unit
		Minimum switching capacity	5 VDC, 10 mA
Relay service life	Electrical: 100,000 operations Mechanical: 20,000,000 operations	**ON/OFF response time**	15 ms max./15 ms max.
Dimensions	12 (W) x 100 (H) x 71 (D)	**Isolation method**	Relay isolation
Insulation resistance	Between A1/3, B1/3 terminals and A5/7, B5/7 terminals: 20 MΩ min. (at 500 VDC) Between the external terminals and functional ground terminal: 20 MΩ min. (at 500 VDC) Between the external terminals and internal circuits: 20 MΩ min. (at 500 VDC) Between the internal circuit and the functional ground terminal: 20 MΩ min. (at 100 VDC)	**Dielectric strength**	Between A1/3, B1/3 terminals and A5/7, B5/7 terminals: 2300 VAC for 1 min at a leakage current of 5 mA max. Between the external terminals and the functional ground terminal: 2300 VAC for 1 min at a leakage current of 5 mA max. Between the external terminals and internal circuits: 2300 VAC for 1 min at a leakage current of 5 mA max. Between the internal circuit and the functional ground terminal: 510 VAC for 1 min at a leakage current of 5 mA max.
I/O power supply method	Supply from external source	**Current capacity of I/O power supply terminal**	Without I/O power supply terminals
NX Unit power consumption	• Connected to a CPU Unit or Communication Control Unit 1.30 W max. • Connected to a Communications Coupler Unit 0.95 W max.	**Current consumption from I/O power supply**	No consumption
Weight	70 g max.		
Circuit layout	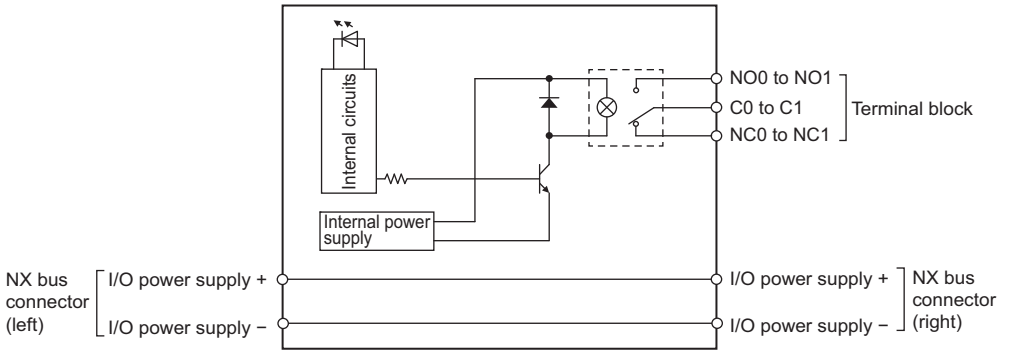 NO0 and NO1 are normal open contacts, and NC0 and NC1 are normal close contacts. You cannot replace the relay.		
Installation orientation and restrictions	Installation orientation: • Connected to a CPU Unit or Communication Control Unit: Possible in upright installation. • Connected to a Communications Coupler Unit: Possible in 6 orientations. Restrictions: No restrictions		
Terminal connection diagram	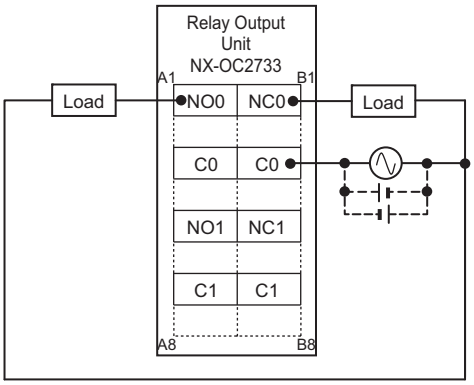 		
Disconnection/Short-circuit detection	Not supported.	**Protective function**	Not supported.

● Relay Output Unit (Screwless Clamping Terminal Block, 24 mm Width) NX-OC4633

Unit name	Relay Output Unit	**Model**	NX-OC4633
Number of points	8 points, independent contacts	**External connection terminals**	Screwless clamping terminal block (8 terminals x 2)
I/O refreshing method	Free-Run refreshing		
Indicators	TS indicator, output indicator 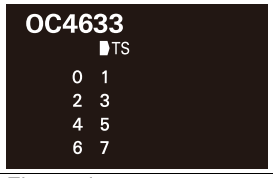 	**Relay type**	N.O. contact
		Maximum switching capacity	250 VAC/2 A (cosϕ = 1), 250 VAC/2 A (cosϕ = 0.4), 24 VDC/2 A, 8 A/Unit
		Minimum switching capacity	5 VDC, 1 mA
Relay service life	Electrical: 100,000 operations* Mechanical: 20,000,000 operations	**ON/OFF response time**	15 ms max./15 ms max.
Dimensions	24 (W) x 100 (H) x 71 (D)	**Isolation method**	Relay isolation
Insulation resistance	Between output bits: 20 MΩ min. (at 500 VDC) Between the external terminals and the functional ground terminal: 20 MΩ min. (at 500 VDC) Between the external terminals and internal circuits: 20 MΩ min. (at 500 VDC) Between the internal circuit and the functional ground terminal: 20 MΩ min. (at 100 VDC)	**Dielectric strength**	Between output bits: 2300 VAC for 1 min at a leakage current of 5 mA max. Between the external terminals and the functional ground terminal: 2300 VAC for 1 min at a leakage current of 5 mA max. Between the external terminals and internal circuits: 2300 VAC for 1 min at a leakage current of 5 mA max. Between the internal circuit and the functional ground terminal: 510 VAC for 1 min at a leakage current of 5 mA max.
Vibration resistance	Conforms to IEC 60068-2-6. 5 to 8.4 Hz with amplitude of 3.5 mm, 8.4 to 150 Hz, acceleration of 9.8 m/s^2 100 min each in X, Y, and Z directions (10 sweeps of 10 min each = 100 min total)	**Shock resistance**	100 m/s^2, 3 times each in X, Y, and Z directions
I/O power supply method	Supply from external source	**Current capacity of I/O power supply terminal**	Without I/O power supply terminals
NX Unit power consumption	• Connected to a CPU Unit or Communication Control Unit 2.00 W max. • Connected to a Communications Coupler Unit 1.65 W max.	**Current consumption from I/O power supply**	No consumption
Weight	140 g max.		
Circuit layout	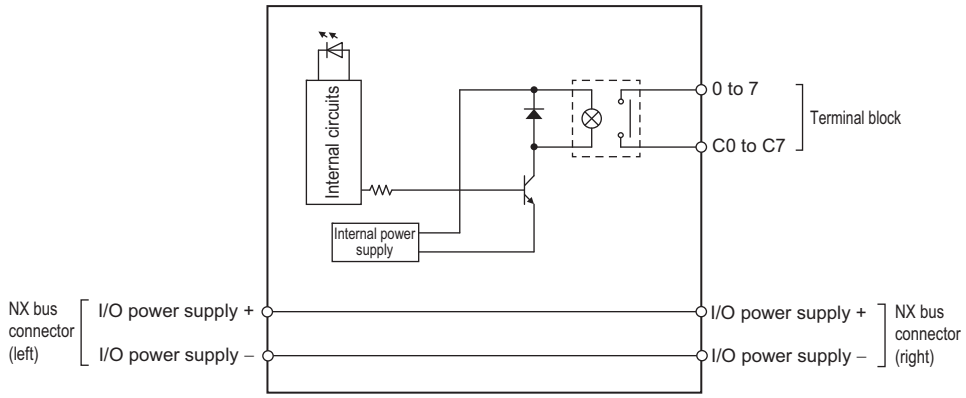 You cannot replace the relay.		

Installation orientation and restrictions	Installation orientation: • Connected to a CPU Unit or Communication Control Unit: Possible in upright installation. • Connected to a Communications Coupler Unit: Possible in 6 orientations. Restrictions: As shown in the following. 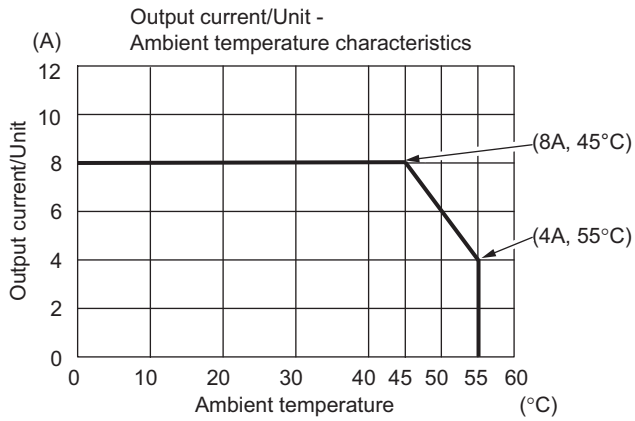
Terminal connection diagram	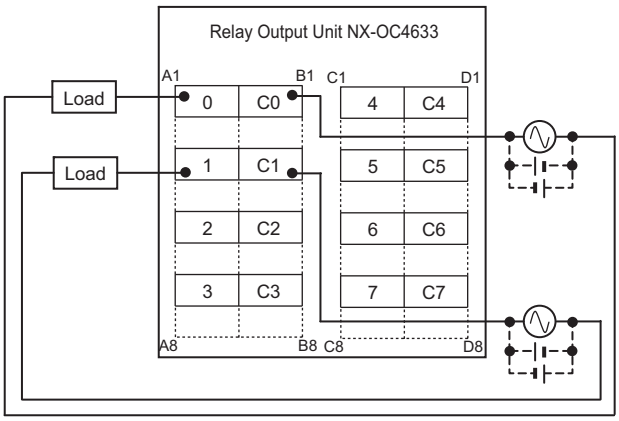

* Electrical service life will vary depending on the current value. Refer to "NX-series Digital I/O Units User's Manual" for details.

● DC Input/Transistor Output Unit (MIL Connector, 30 mm Width)
NX-MD6121-5

Unit name		DC Input/Transistor Output Unit	**Model**		NX-MD6121-5
Number of points		16 inputs/16 outputs	**External connection terminals**		2 MIL connectors (20 terminals)
I/O refreshing method		Switching Synchronous I/O refreshing and Free-Run refreshing			
Output section (CN1)	**Internal I/O common**	NPN	**Input section (CN2)**	**Internal I/O common**	For both NPN/PNP
	Rated voltage	12 to 24 VDC		**Rated input voltage**	24 VDC (15 to 28.8 VDC)
	Operating load voltage range	10.2 to 28.8 VDC		**Input current**	7 mA typical (at 24 VDC)
	Maximum value of load current	0.5 A/point, 2 A/Unit		**ON voltage/ON current**	15 VDC min./3 mA min. (between COM and each signal)
	Maximum inrush current	4.0 A/point, 10 ms max.		**OFF voltage/OFF current**	5 VDC max./1 mA max. (between COM and each signal)
	Leakage current	0.1 mA max.		**ON/OFF response time**	20 µs max./400 µs max.
	Residual voltage	1.5 V max.		**Input filter time**	No filter, 0.25 ms, 0.5 ms, 1 ms (default), 2 ms, 4 ms, 8 ms, 16 ms, 32 ms, 64 ms, 128 ms, 256 ms
	ON/OFF response time	0.1 ms max./0.8 ms max.			
Indicators		TS indicator, I/O indicators	**Dimensions**		30 (W) x 100 (H) x 71 (D)
			Isolation method		Photocoupler isolation
			Insulation resistance		20 MΩ min. between isolated circuits (at 100 VDC)
			Dielectric strength		510 VAC between isolated circuits for 1 minute at a leakage current of 5 mA max.
			I/O power supply method		Supply from external source
			Current capacity of I/O power supply terminal		Without I/O power supply terminals
			NX Unit power consumption		• Connected to a CPU Unit or Communication Control Unit 1.00 W max. • Connected to a Communications Coupler Unit 0.70 W max.
			Current consumption from I/O power supply		30 mA max.
			Weight		105 g max.

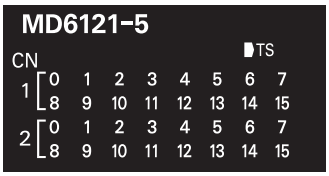

Circuit layout

CN1 (left) output circuit

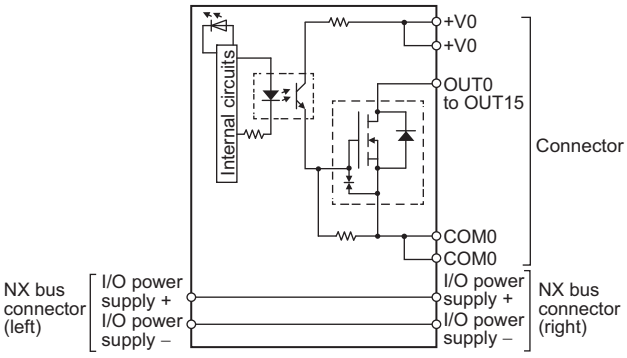

CN2 (right) input circuit

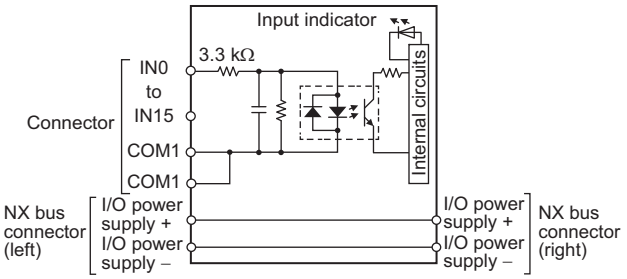

Installation orientation and restrictions

Installation orientation:
- Connected to a CPU Unit or Communication Control Unit: Possible in upright installation.
- Connected to a Communications Coupler Unit: Possible in 6 orientations.

Restrictions: As shown in the following.

• For upright installation

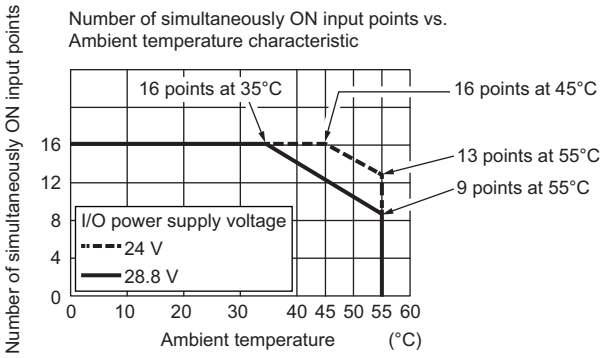

• For any installation other than upright

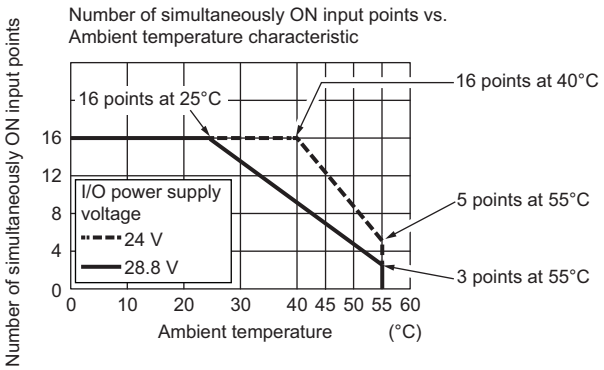

Terminal connection diagram

CN1 (left) output terminal

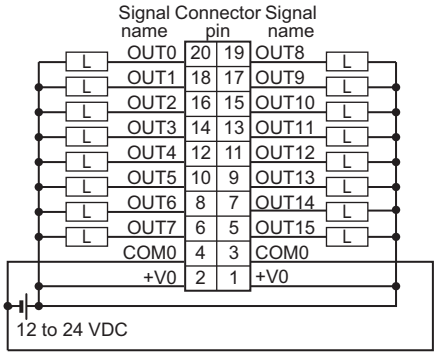

- Be sure to wire both pins 3 and 4 (COM0) of CN1.
- Be sure to wire both pins 1 and 2 (+V0) of CN1.

CN2 (right) input terminal

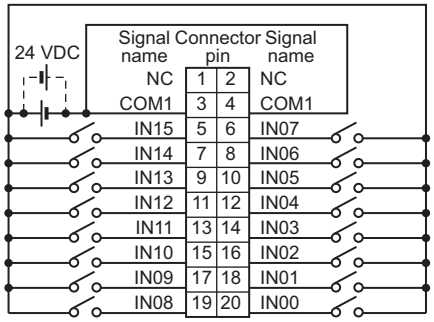

- The polarity of the input power supply of CN2 can be connected in either direction.
- Be sure to wire both pins 3 and 4 (COM1) of CN2, and set the same polarity for both pins.

Disconnection/Short-circuit detection	Not supported.	**Protective function**	Not supported.

NX-MD6256-5

Unit name		DC Input/Transistor Output Unit	**Model**		NX-MD6256-5
Number of points		16 inputs/16 outputs	**External connection terminals**		2 MIL connectors (20 terminals)
I/O refreshing method		Switching Synchronous I/O refreshing and Free-Run refreshing			
Output section (CN1)	**Internal I/O common**	PNP	**Input section (CN2)**	**Internal I/O common**	For both NPN/PNP
	Rated voltage	24 VDC		**Rated input voltage**	24 VDC (15 to 28.8 VDC)
	Operating load voltage range	20.4 to 28.8 VDC		**Input current**	7 mA typical (at 24 VDC)
	Maximum value of load current	0.5 A/point, 2 A/Unit		**ON voltage/ON current**	15 VDC min./3 mA min. (between COM and each signal)
	Maximum inrush current	4.0 A/point, 10 ms max.		**OFF voltage/OFF current**	5 VDC max./1 mA max. (between COM and each signal)
	Leakage current	0.1 mA max.		**ON/OFF response time**	20 µs max./400 µs max.
	Residual voltage	1.5 V max.		**Input filter time**	No filter, 0.25 ms, 0.5 ms, 1 ms (default), 2 ms, 4 ms, 8 ms, 16 ms, 32 ms, 64 ms, 128 ms, 256 ms
	ON/OFF response time	0.5 ms max./1.0 ms max.			
Indicators		TS indicator, I/O indicators	**Dimensions**		30 (W) x 100 (H) x 71 (D)
			Isolation method		Photocoupler isolation
			Insulation resistance		20 MΩ min. between isolated circuits (at 100 VDC)
			Dielectric strength		510 VAC between isolated circuits for 1 minute at a leakage current of 5 mA max.
			I/O power supply method		Supply from external source
			Current capacity of I/O power supply terminal		Without I/O power supply terminals
			NX Unit power consumption		• Connected to a CPU Unit or Communication Control Unit 1.10 W max. • Connected to a Communications Coupler Unit 0.75 W max.
			Current consumption from I/O power supply		40 mA max.
			Weight		110 g max.
Circuit layout		CN1 (left) output circuit CN2 (right) input circuit			

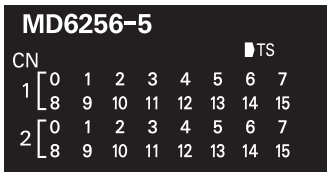

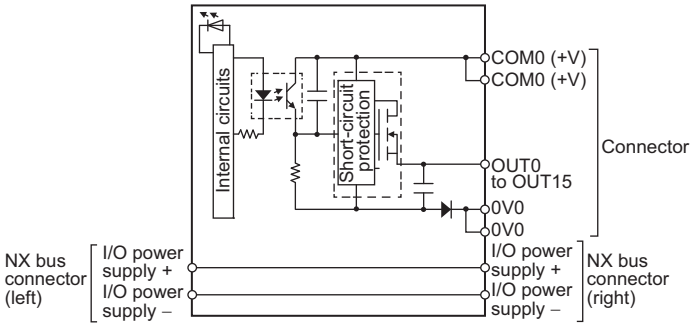

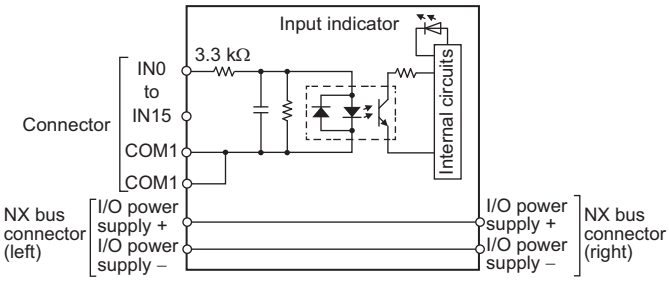

Installation orientation and restrictions

Installation orientation:
- Connected to a CPU Unit or Communication Control Unit: Possible in upright installation.
- Connected to a Communications Coupler Unit: Possible in 6 orientations.

Restrictions: As shown in the following.

• For upright installation

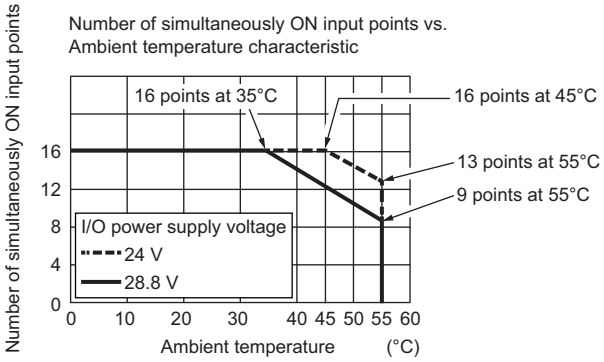

• For any installation other than upright

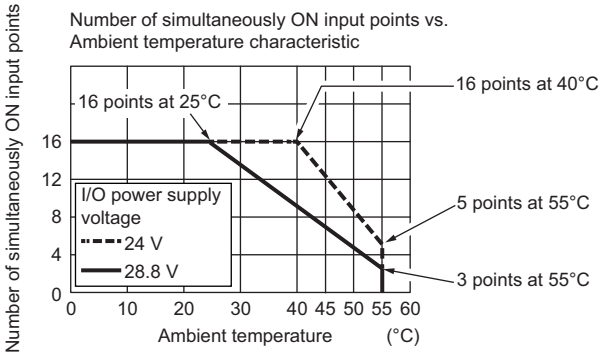

Terminal connection diagram

CN1 (left) output terminal

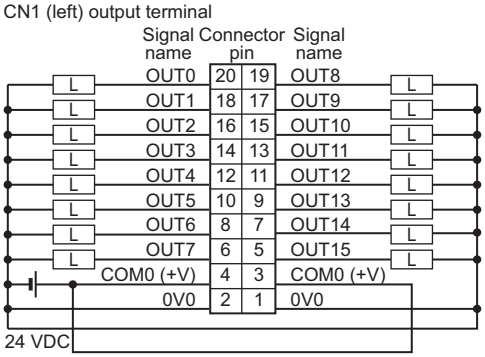

- Be sure to wire both pins 3 and 4 (COM0 (+V)) of CN1.
- Be sure to wire both pins 1 and 2 (0V0) of CN1.

CN2 (right) input terminal

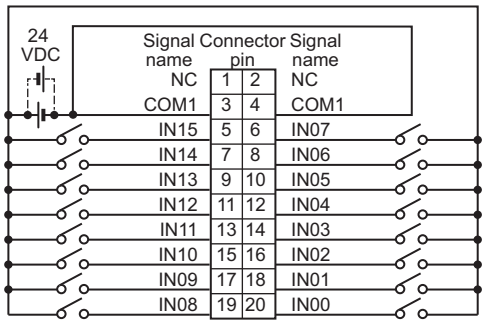

- The polarity of the input power supply of CN2 can be connected in either direction.
- Be sure to wire both pins 3 and 4 (COM1) of CN2, and set the same polarity for both pins.

Disconnection/Short-circuit detection	Not supported.	**Protective function**	With load short-circuit protection.

● DC Input/Transistor Output Unit (Fujitsu Connector, 30 mm Width)
NX-MD6121-6

Unit name		DC Input/Transistor Output Unit	**Model**		NX-MD6121-6
Number of points		16 inputs/16 outputs	**External connection terminals**		2 Fujitsu connectors (24 terminals)
I/O refreshing method		Switching Synchronous I/O refreshing and Free-Run refreshing			
Output section (CN1)	**Internal I/O common**	NPN	**Input section (CN2)**	**Internal I/O common**	For both NPN/PNP
	Rated voltage	12 to 24 VDC		**Rated input voltage**	24 VDC (15 to 28.8 VDC)
	Operating load voltage range	10.2 to 28.8 VDC		**Input current**	7 mA typical (at 24 VDC)
	Maximum value of load current	0.5 A/point, 2 A/Unit		**ON voltage/ON current**	15 VDC min./3 mA min. (between COM and each signal)
	Maximum inrush current	4.0 A/point, 10 ms max.		**OFF voltage/OFF current**	5 VDC max./1 mA max. (between COM and each signal)
	Leakage current	0.1 mA max.		**ON/OFF response time**	20 µs max./400 µs max.
	Residual voltage	1.5 V max.		**Input filter time**	No filter, 0.25 ms, 0.5 ms, 1 ms (default), 2 ms, 4 ms, 8 ms, 16 ms, 32 ms, 64 ms, 128 ms, 256 ms
	ON/OFF response time	0.1 ms max./0.8 ms max.			
Indicators		TS indicator, I/O indicators	**Dimensions**		30 (W) x 100 (H) x 71 (D)
			Isolation method		Photocoupler isolation
			Insulation resistance		20 MΩ min. between isolated circuits (at 100 VDC)
			Dielectric strength		510 VAC between isolated circuits for 1 minute at a leakage current of 5 mA max.
			I/O power supply method		Supply from external source
			Current capacity of I/O power supply terminal		Without I/O power supply terminals
			NX Unit power consumption		• Connected to a CPU Unit or Communication Control Unit 1.00 W max. • Connected to a Communications Coupler Unit 0.70 W max.
			Current consumption from I/O power supply		30 mA max.
			Weight		95 g max.

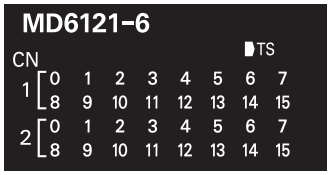

Circuit layout

CN1 (left) output circuit

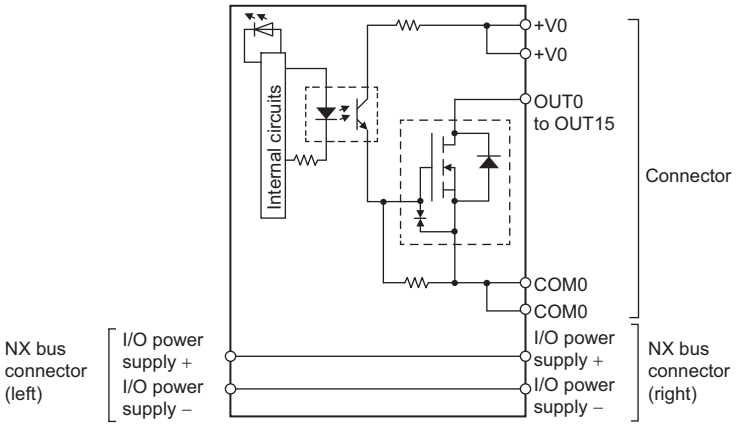

CN2 (right) input circuit

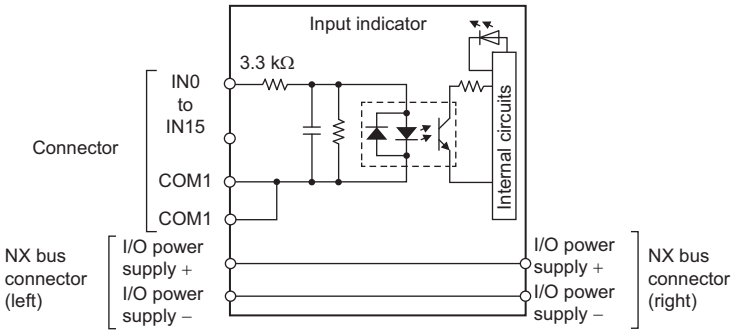

Installation orientation and restrictions	Installation orientation: • Connected to a CPU Unit or Communication Control Unit: Possible in upright installation. • Connected to a Communications Coupler Unit: Possible in 6 orientations. Restrictions: As shown in the following. • For upright installation Number of simultaneously ON input points vs. Ambient temperature characteristic 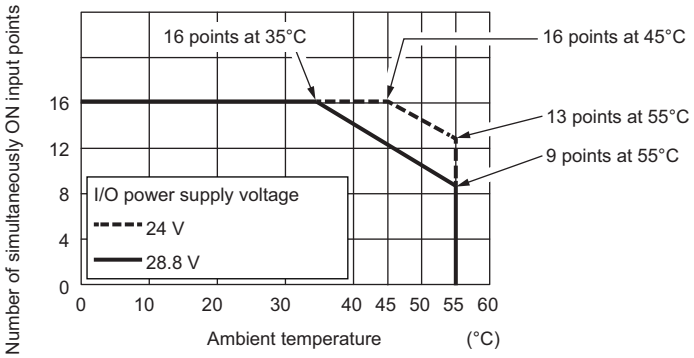 • For any installation other than upright Number of simultaneously ON input points vs. Ambient temperature characteristic 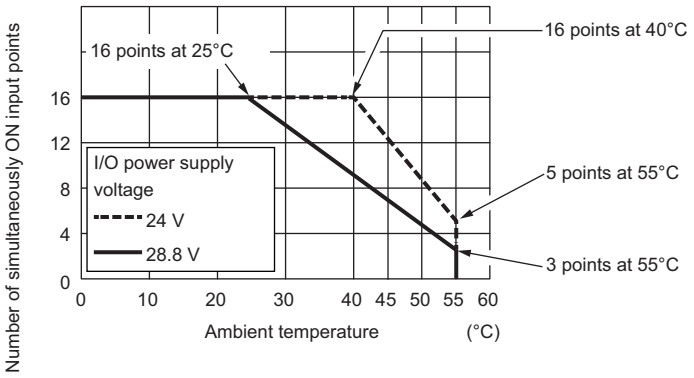

Terminal connection diagram

CN1 (left) output terminal

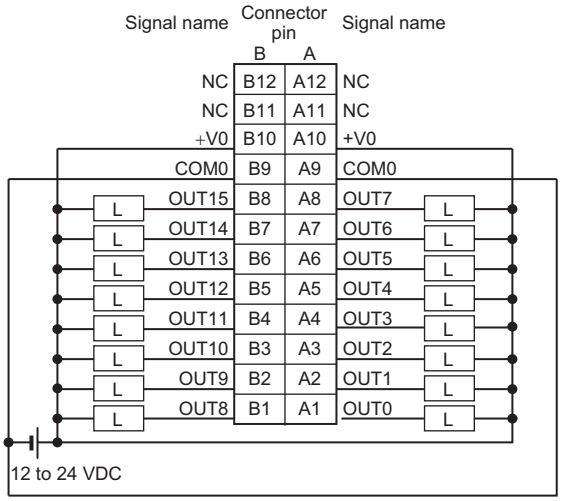

- Be sure to wire both pins A9 and B9 (COM0) of CN1.
- Be sure to wire both pins A10 and B10 (+V0) of CN1.

CN2 (right) input terminal

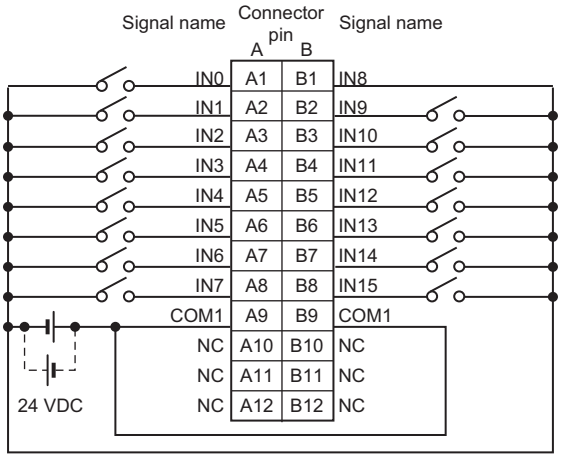

- The polarity of the input power supply of CN2 can be connected in either direction.
- Be sure to wire both pins A9 and B9 (COM1) of CN2, and set the same polarity for both pins.

Disconnection/Short-circuit detection	Not supported.	**Protective function**	Not supported.

Version Information

Connected to a CPU Unit

Refer to the user's manual for the CPU Unit for details on the CPU Units to which NX Units can be connected.

NX Unit		Corresponding unit versions/versions	
Model	Unit version	CPU Unit	Sysmac Studio
NX-ID3317	Ver.1.0	Ver.1.13	Ver.1.17
NX-ID3343			
NX-ID3344			
NX-ID3417			
NX-ID3443			
NX-ID3444			
NX-ID4342			
NX-ID4442			
NX-ID5142-1			
NX-ID5142-5			
NX-ID5342			
NX-ID5442			
NX-ID6142-5			
NX-ID6142-6			
NX-IA3117			
NX-OD2154			
NX-OD2258			
NX-OD3121			
NX-OD3153			
NX-OD3256			
NX-OD3257			
NX-OD3268			
NX-OD4121			
NX-OD4256			
NX-OD5121			
NX-OD5121-1			
NX-OD5121-5			
NX-OD5256			
NX-OD5256-1			
NX-OD5256-5			
NX-OD6121-5			
NX-OD6121-6			
NX-OD6256-5			
NX-OC2633			
NX-OC2733			
NX-OC4633			
NX-MD6121-5			
NX-MD6121-6			
NX-MD6256-5			

Note: Some Units do not have all of the versions given in the above table. If a Unit does not have the specified version, support is provided by the oldest available version after the specified version. Refer to the user's manuals for the specific Units for the relation between models and versions.

Connected to an EtherCAT Coupler Unit

NX Unit		Corresponding unit versions/versions		
Model	Unit version	EtherCAT Coupler Unit	CPU Unit or Industrial PC	Sysmac Studio
NX-ID3317	Ver.1.0	Ver.1.0	Ver.1.05	Ver.1.06
NX-ID3343				
NX-ID3344		Ver.1.1	Ver.1.06 *	Ver.1.07
NX-ID3417		Ver.1.0	Ver.1.05	Ver.1.06
NX-ID3443				
NX-ID3444		Ver.1.1	Ver.1.06 *	Ver.1.07
NX-ID4342		Ver.1.0	Ver.1.05	Ver.1.06
NX-ID4442				
NX-ID5142-1				Ver.1.13
NX-ID5142-5				Ver.1.10
NX-ID5342				Ver.1.06
NX-ID5442				
NX-ID6142-5				Ver.1.10
NX-ID6142-6				Ver.1.13
NX-IA3117				Ver.1.08
NX-OD2154	Ver.1.0	Ver.1.1	Ver.1.06 *	Ver.1.07
NX-OD2258				
NX-OD3121		Ver.1.0	Ver.1.05	Ver.1.06
NX-OD3153				
NX-OD3256				
NX-OD3257				
NX-OD3268				Ver.1.13
NX-OD4121				Ver.1.06
NX-OD4256				
NX-OD5121				
NX-OD5121-1				Ver.1.13
NX-OD5121-5				Ver.1.10
NX-OD5256				Ver.1.06
NX-OD5256-1				Ver.1.13
NX-OD5256-5				Ver.1.10
NX-OD6121-5				
NX-OD6121-6				Ver.1.13
NX-OD6256-5				Ver.1.10
NX-OC2633				Ver.1.06
NX-OC2733				Ver.1.08
NX-OC4633				Ver.1.17
NX-MD6121-5	Ver.1.0	Ver.1.0	Ver.1.05	Ver.1.10
NX-MD6121-6				Ver.1.13
NX-MD6256-5				Ver.1.10

Note: Some Units do not have all of the versions given in the above table. If a Unit does not have the specified version, support is provided by the oldest available version after the specified version. Refer to the user's manuals for the specific Units for the relation between models and versions.

* The instructions for time stamp refreshing are supported by CPU Units with unit version 1.06 or later. If you do not use instructions for time stamp refreshing, you can use version 1.05. Refer to the *NJ/NX-series Instructions Reference Manual* (Cat. No. W502) for details on the instructions for time stamp refreshing.

Connected to an EtherNet/IP Coupler Unit

NX Unit		Corresponding unit versions/versions					
Model	Unit version	Application with an NJ/NX/NY-series Controller *1			Application with a CS/CJ/CP-series PLC *2		
		EtherNet/IP Coupler Unit	CPU Unit or Industrial PC	Sysmac Studio	EtherNet/IP Coupler Unit	Sysmac Studio	NX-IO Configurator *3
NX-ID3317	Ver. 1.0	Ver. 1.2	Ver. 1.14	Ver. 1.19	Ver. 1.0	Ver. 1.10	Ver. 1.00
NX-ID3343							
NX-ID3344		---	---	---	---	---	---
NX-ID3417		Ver. 1.2	Ver. 1.14	Ver. 1.19	Ver. 1.0	Ver. 1.10	Ver. 1.00
NX-ID3443							
NX-ID3444		---	---	---	---	---	---
NX-ID4342		Ver. 1.2	Ver. 1.14	Ver. 1.19	Ver. 1.0	Ver. 1.10	Ver. 1.00
NX-ID4442							
NX-ID5142-1						Ver. 1.13	
NX-ID5142-5						Ver. 1.10	
NX-ID5342							
NX-ID5442							
NX-ID6142-5							
NX-ID6142-6						Ver. 1.13	
NX-IA3117						Ver. 1.10	
NX-OD2154		---	---	---	---	---	---
NX-OD2258							
NX-OD3121		Ver. 1.2	Ver. 1.14	Ver. 1.19	Ver. 1.0	Ver. 1.10	Ver. 1.00
NX-OD3153							
NX-OD3256							
NX-OD3257							
NX-OD3268						Ver. 1.13	
NX-OD4121						Ver. 1.10	
NX-OD4256							
NX-OD5121							
NX-OD5121-1						Ver. 1.13	
NX-OD5121-5						Ver. 1.10	
NX-OD5256							
NX-OD5256-1						Ver. 1.13	
NX-OD5256-5						Ver. 1.10	
NX-OD6121-5							
NX-OD6121-6						Ver. 1.13	
NX-OD6256-5						Ver. 1.10	
NX-OC2633							
NX-OC2733							
NX-OC4633						Ver. 1.17	
NX-MD6121-5						Ver. 1.10	
NX-MD6121-6						Ver. 1.13	
NX-MD6256-5						Ver. 1.10	

Note: 1. Some Units do not have all of the versions given in the above table. If a Unit does not have the specified version, support is provided by the oldest available version after the specified version. Refer to the user's manuals for the specific Units for the relation between models and versions.

2. Note: You cannot connect the relevant NX Unit to the target Communications Coupler Unit if "---" is shown in the corresponding unit versions/versions column.

✻1 Refer to the user's manual for the EtherNet/IP Coupler Units for information on the unit versions of EtherNet/IP Units that are compatible with EtherNet/IP Coupler Units.

✻2 Refer to the user's manual for the EtherNet/IP Coupler Units for information on the unit versions of CPU Units and EtherNet/IP Units that are compatible with EtherNet/IP Coupler Units.

✻3 For connection to an EtherNet/IP Coupler Unit with unit version 1.0, connection is supported only for a connection to the peripheral USB port on the EtherNet/IP Coupler Unit. You cannot connect by any other path. If you need to connect by another path, use an EtherNet/IP Coupler Unit with unit version 1.2 or later.

Connected to Communication Control Units

NX Unit		Corresponding unit versions/versions	
Model	Unit version	Communication Control Unit	Sysmac Studio
NX-ID3317	Ver. 1.0	Ver. 1.00	Ver. 1.24
NX-ID3343			
NX-ID3344		---	---
NX-ID3417		Ver. 1.00	Ver. 1.24
NX-ID3443			
NX-ID3444	Ver. 1.0	---	---
NX-ID4342		Ver. 1.00	Ver. 1.24
NX-ID4442			
NX-ID5142-1			
NX-ID5142-5			
NX-ID5342			
NX-ID5442			
NX-ID6142-5			
NX-ID6142-6			
NX-IA3117			
NX-OD2154		---	---
NX-OD2258			
NX-OD3121		Ver. 1.00	Ver. 1.24
NX-OD3153			
NX-OD3256			
NX-OD3257			
NX-OD3268			
NX-OD4121			
NX-OD4256			
NX-OD5121			
NX-OD5121-1			
NX-OD5121-5			
NX-OD5256			
NX-OD5256-1			
NX-OD5256-5			
NX-OD6121-5			
NX-OD6121-6			
NX-OD6256-5			
NX-OC2633			
NX-OC2733			
NX-OC4633			
NX-MD6121-5			
NX-MD6121-6			
NX-MD6256-5			

Note: 1. Some Units do not have all of the versions given in the above table. If a Unit does not have the specified version, support is provided by the oldest available version after the specified version. Refer to the user's manuals for the specific Units for the relation between models and versions.

2. Note: You cannot connect the relevant NX Unit to the Communication Control Unit if "---" is shown in the corresponding unit versions/versions column.

External Interface

Screwless Clamping Terminal Block Type

12 mm Width

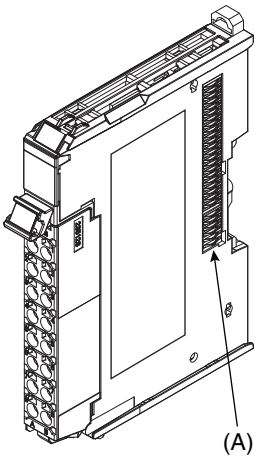

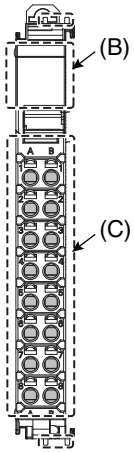

24 mm Width

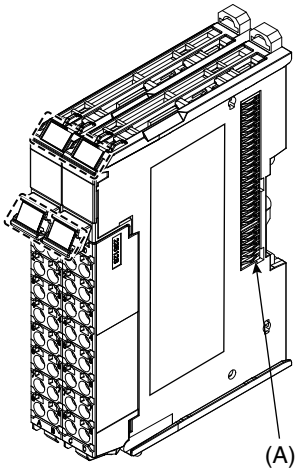

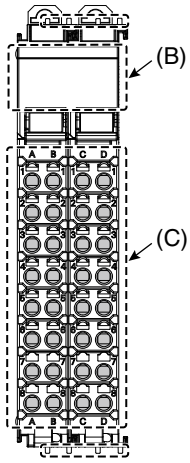

Letter	Item	Specification
(A)	NX bus connector	This connector is used to connect to another Unit.
(B)	Indicators	The indicators show the current operating status of the Unit.
(C)	Terminal block	The terminal block is used to connect to external devices. The number of terminals depends on the Unit.

Terminal Blocks

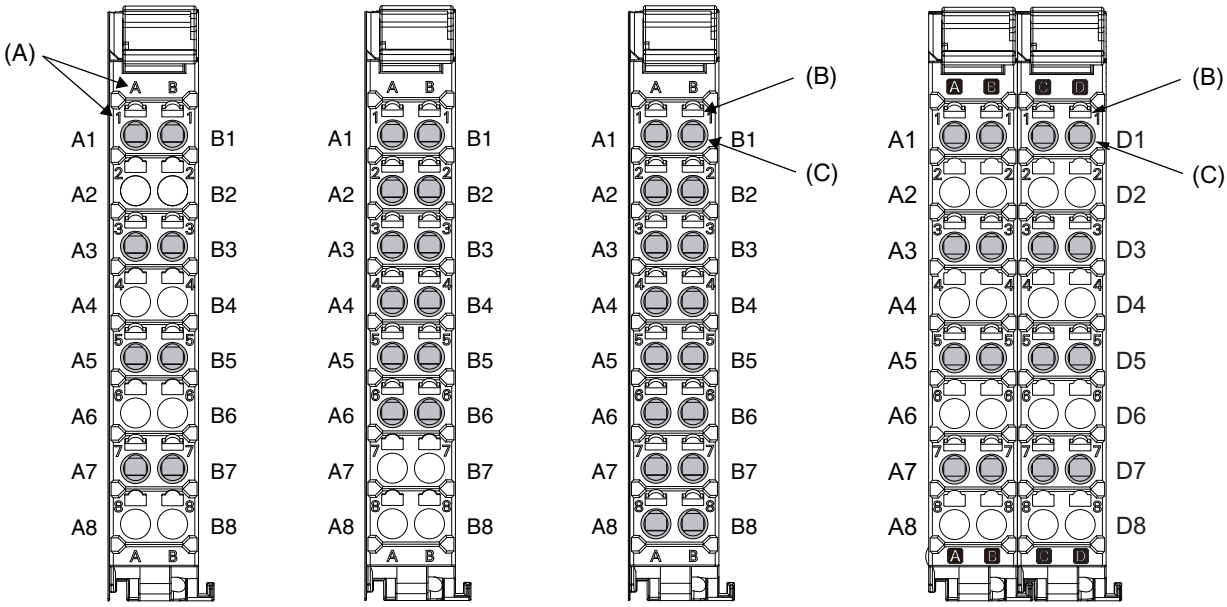

8 terminals | 12 terminals | 16 terminals | 8 terminals x 2

Letter	Item	Specification
(A)	Terminal number indication	The terminal number is identified by a column (A through D) and a row (1 through 8). Therefore, terminal numbers are written as a combination of columns and rows, A1 through A8 and B1 through B8. The terminal number indication is the same regardless of the number of terminals on the terminal block.
(B)	Release hole	A flat-blade screwdriver is inserted here to attach and remove the wiring.
(C)	Terminal hole	The wires are inserted into these holes.

Applicable Terminal Blocks for Each Unit Model

Unit model	Terminal Blocks			
	Model	No. of terminals	Ground terminal mark	Terminal current capacity
NX-ID3□□□	NX-TBA122	12	None	10 A
NX-ID4□□□	NX-TBA162	16	None	10 A
NX-ID5□□□	NX-TBA162	16	None	10 A
NX-IA3117	NX-TBA082	8	None	10 A
NX-OD2□□□	NX-TBA082	8	None	10 A
NX-OD3□□□ (any model other than NX-OD3268)	NX-TBA122	12	None	10 A
NX-OD3268 NX-OD4□□□	NX-TBA162	16	None	10 A
NX-OD5□□□	NX-TBA162	16	None	10 A
NX-OC2□□□	NX-TBA082	8	None	10 A
NX-OC4633	NX-TBA082	8	None	10 A
	NX-TBB082	8	None	10 A

Applicable Wires

Using Ferrules

If you use ferrules, attach the twisted wires to them.
Observe the application instructions for your ferrules for the wire stripping length when attaching ferrules.
Always use plated one-pin ferrules. Do not use unplated ferrules or two-pin ferrules.

The applicable ferrules, wires, and crimping tools are listed in the following table.

Terminal type	Manufacturer	Ferrule model	Applicable wire (mm^2 (AWG))	Crimping tool
Terminals other than ground terminals	Phoenix Contact	AI0,34-8	0.34 (#22)	Phoenix Contact (The figure in parentheses is the applicable wire size.) CRIMPFOX 6 (0.25 to 6 mm^2, AWG24 to 10)
		AI0,5-8	0.5 (#20)	
		AI0,5-10		
		AI0,75-8	0.75 (#18)	
		AI0,75-10		
		AI1,0-8	1.0 (#18)	
		AI1,0-10		
		AI1,5-8	1.5 (#16)	
		AI1,5-10		
Ground terminals		AI2,5-10	2.0 *	
Terminals other than ground terminals	Weidmuller	H0.14/12	0.14 (#26)	Weidmuller (The figure in parentheses is the applicable wire size.) PZ6 Roto (0.14 to 6 mm^2, AWG 26 to 10)
		H0.25/12	0.25 (#24)	
		H0.34/12	0.34 (#22)	
		H0.5/14	0.5 (#20)	
		H0.5/16		
		H0.75/14	0.75 (#18)	
		H0.75/16		
		H1.0/14	1.0 (#18)	
		H1.0/16		
		H1.5/14	1.5 (#16)	
		H1.5/16		

* Some AWG 14 wires exceed 2.0 mm^2 and cannot be used in the screwless clamping terminal block.

When you use any ferrules other than those in the above table, crimp them to the twisted wires so that the following processed dimensions are achieved.

Finished Dimensions of Ferrules

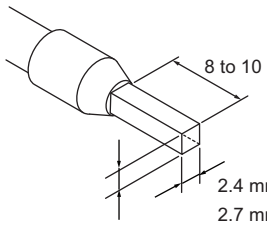

Using Twisted Wires/Solid Wires

If you use the twisted wires or the solid wires, use the following table to determine the correct wire specifications.

Terminals		Wire type				Wire size	Conductor length (stripping length)
		Twisted wires		Solid wire			
Classification	Current capacity	Plated	Unplated	Plated	Unplated		
All terminals except ground terminals	2 A or less	Possible	Possible	Possible	Possible	0.08 to 1.5 mm^2 AWG28 to 16	8 to 10 mm
	Greater than 2 A and 4 A or less		Not Possible	Possible *1	Not Possible		
	Greater than 4 A	Possible *1		Not Possible			
Ground terminals	---	Possible	Possible	Possible *2	Possible *2	2.0 mm^2	9 to 10 mm

*1. Secure wires to the screwless clamping terminal block. Refer to the Securing Wires in the USER'S MANUAL for how to secure wires.
*2. With the NX-TB□□□1 Terminal Block, use twisted wires to connect the ground terminal. Do not use a solid wire.

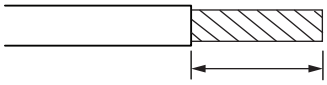

Conductor length (stripping length)

<Additional Information> If more than 2 A will flow on the wires, use plated wires or use ferrules.

M3 Screw Terminal Block Type

30 mm Width

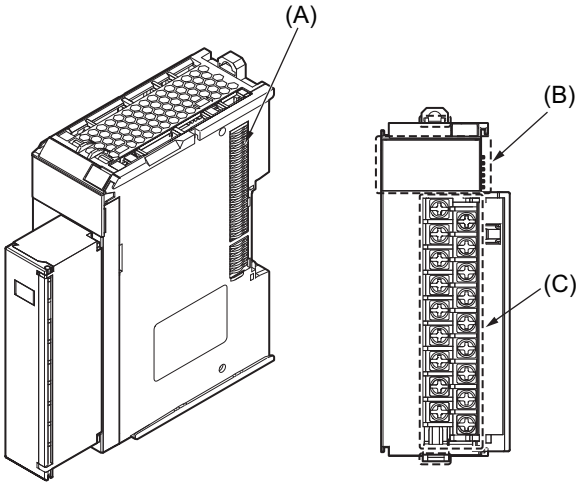

Letter	Item	Specification
(A)	NX bus connector	This connector is used to connect to another Unit.
(B)	Indicators	The indicators show the current operating status of the Unit.
(C)	Screw terminals	These screw terminals are used to connect the wires.

MIL Connector Type (1 Connector with 20 terminals)

30 mm Width

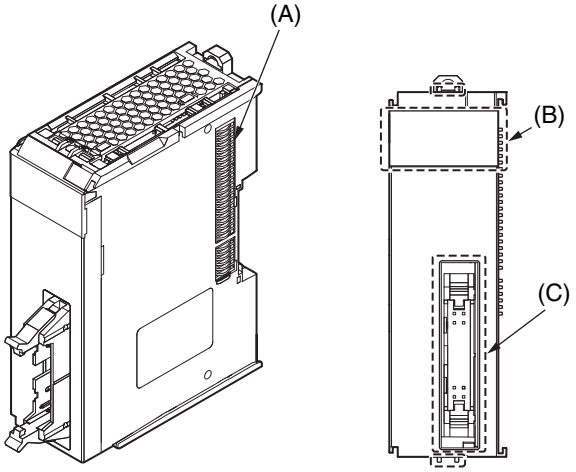

MIL Connector Type (1 Connector with 40 terminals)

30 mm Width

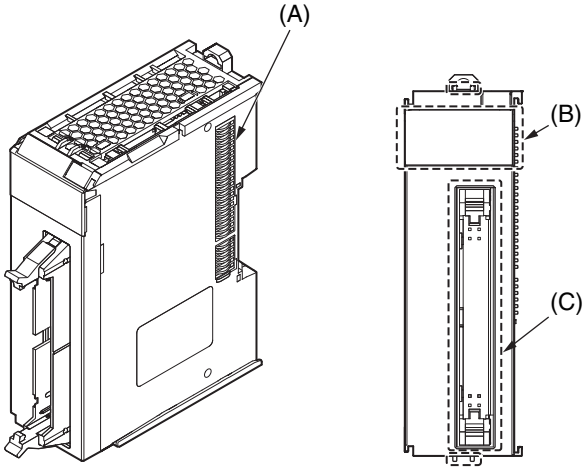

MIL Connector Type (2 Connectors with 20 terminals)

30 mm Width

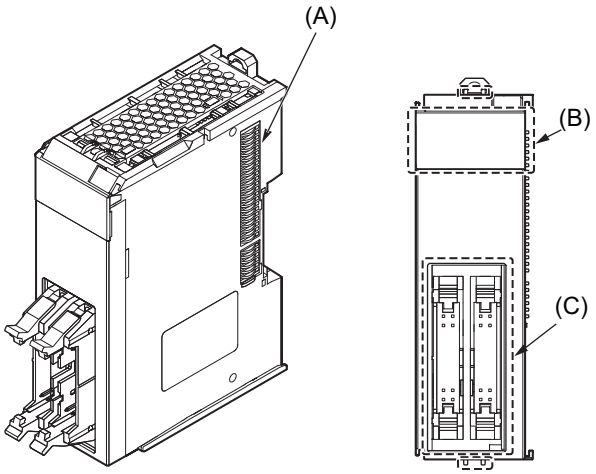

Letter	Item	Specification
(A)	NX bus connector	This connector is used to connect to another Unit.
(B)	Indicators	The indicators show the current operating status of the Unit.
(C)	Connectors	The connectors are used to connect to external devices.

Fujitsu Connector Type (1 Connector with 40 terminals)

30 mm Width

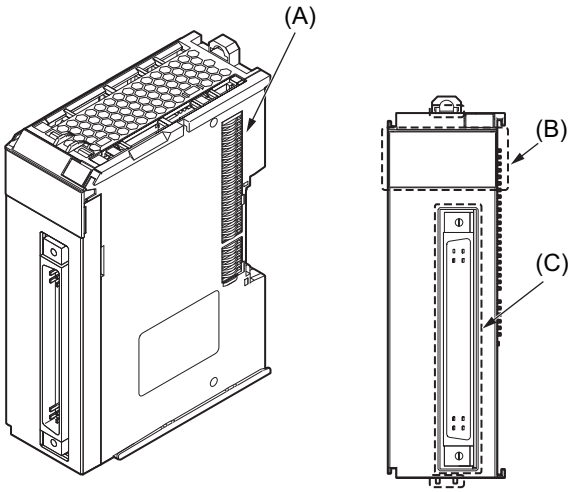

Fujitsu Connector Type (2 Connectors with 24 terminals)

30 mm Width

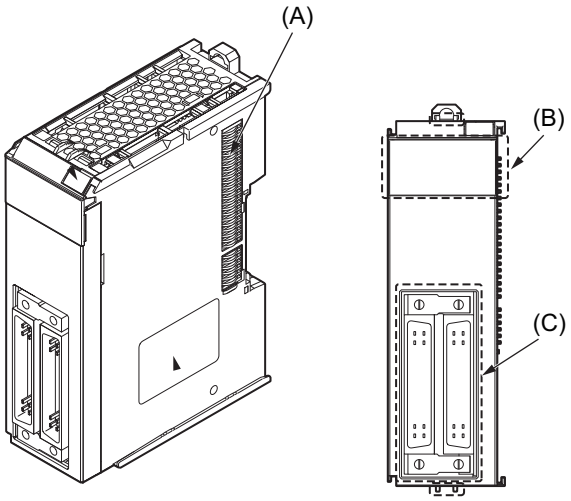

Letter	Item	Specification
(A)	NX bus connector	This connector is used to connect to another Unit.
(B)	Indicators	The indicators show the current operating status of the Unit.
(C)	Connectors	The connectors are used to connect to external devices.

Dimensions

(Unit/mm)

Screwless Clamping Terminal Block Type

12 mm Width

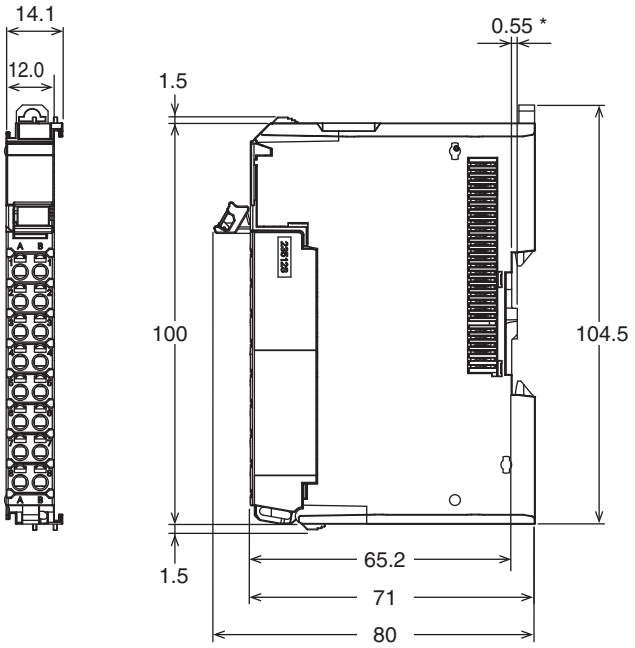

* The dimension is 1.35 mm for Units with lot numbers through December 2014.

24 mm Width

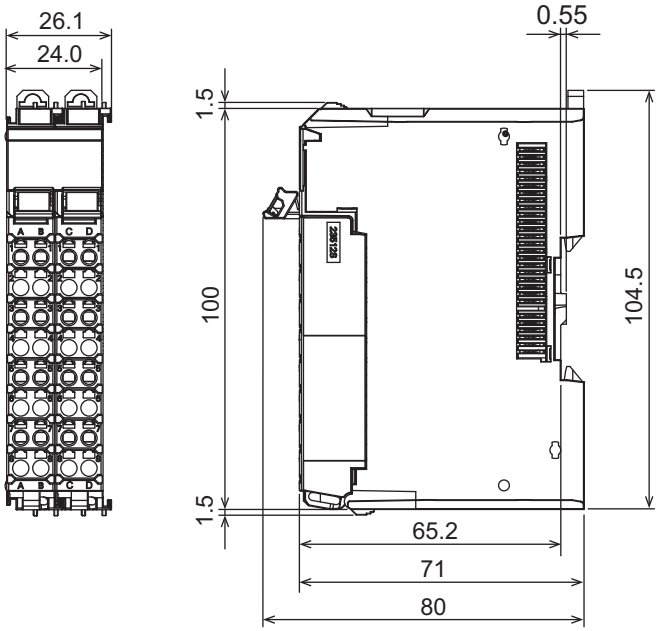

M3 Screw Terminal Block Type

30 mm Width

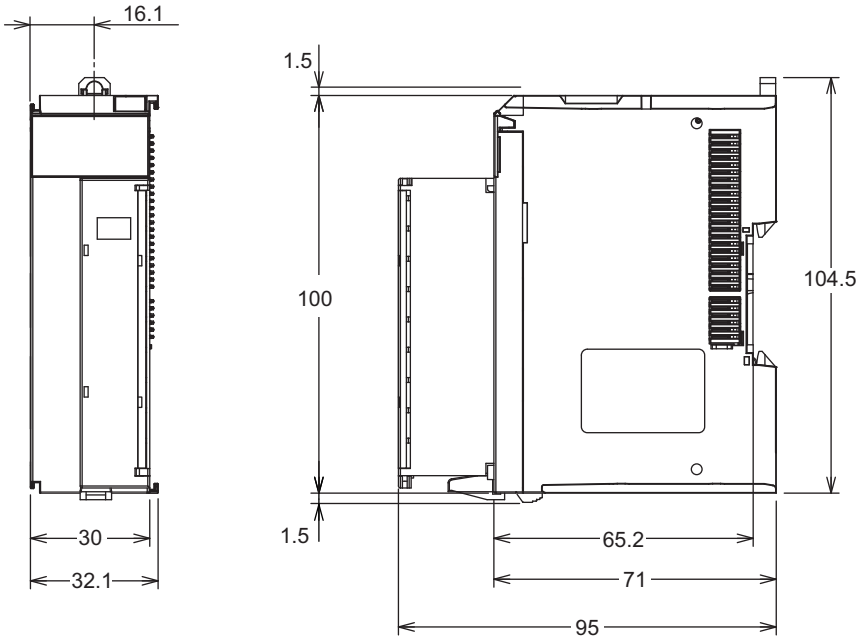

MIL Connector Type (1 Connector with 20 terminals)

30 mm Width

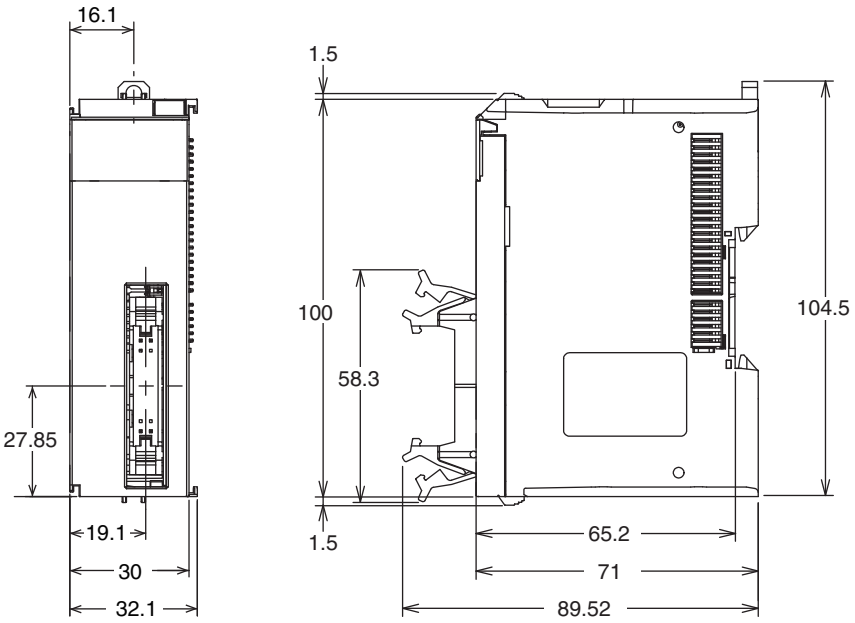

MIL Connector Type (1 Connector with 40 terminals)

30 mm Width

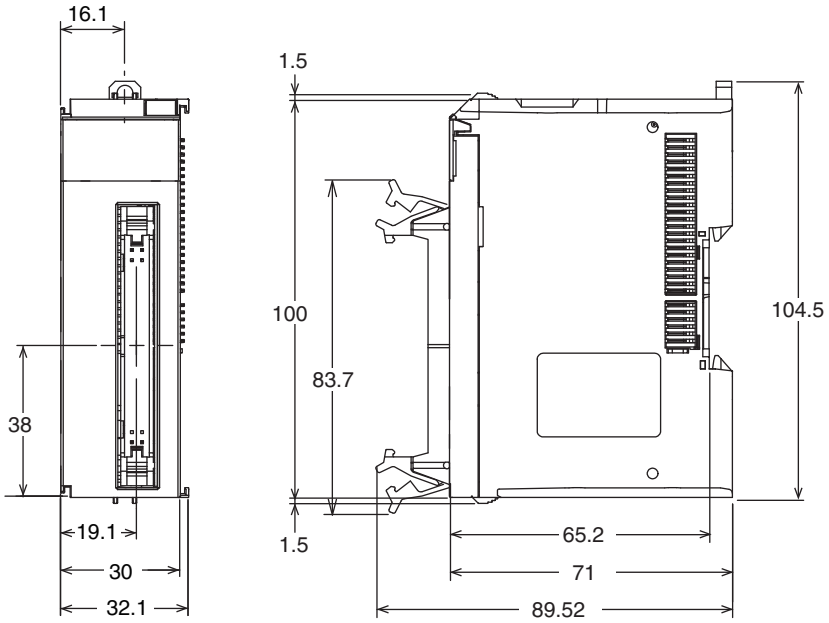

MIL Connector Type (2 Connectors with 20 terminals)

30 mm Width

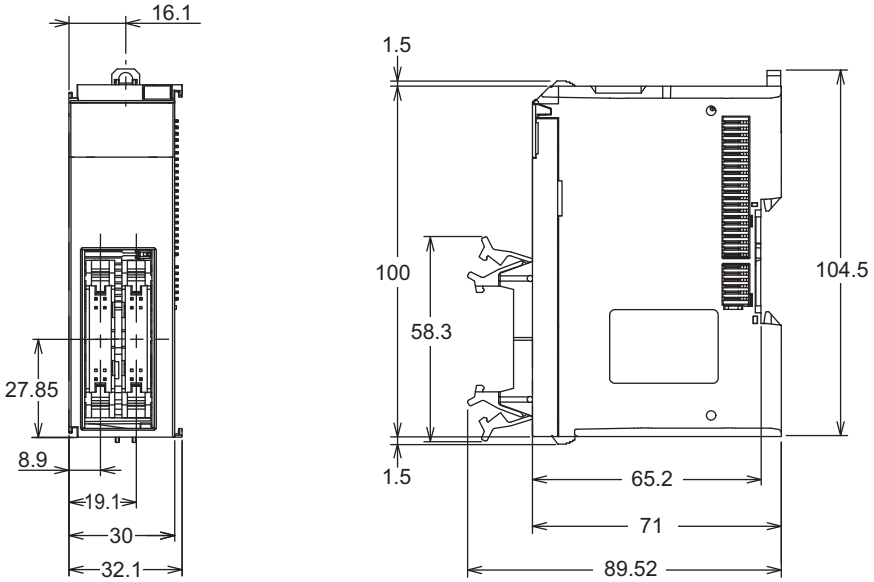

Fujitsu Connector Type (1 Connector with 40 terminals)

30 mm Width

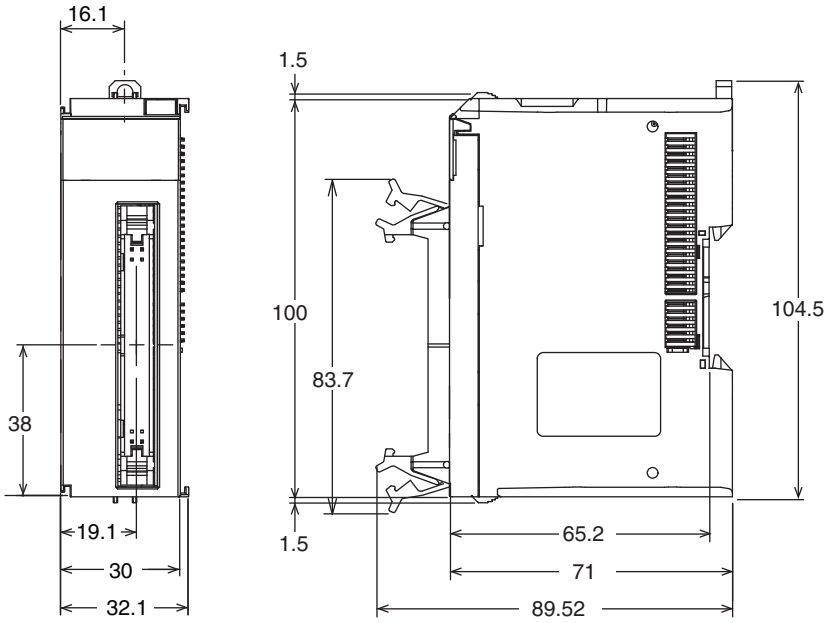

Fujitsu Connector Type (2 Connectors with 24 terminals)

30 mm Width

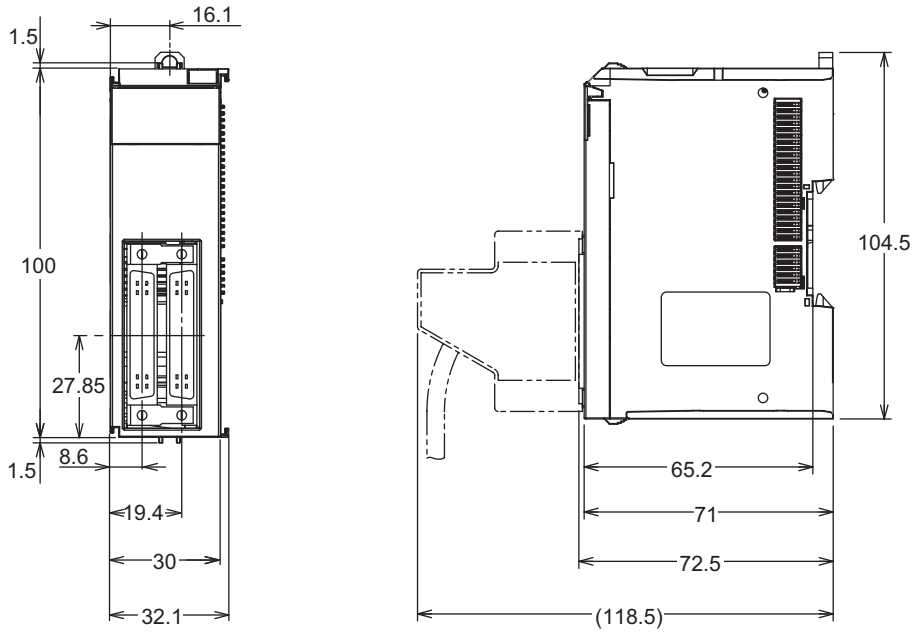

Related Manual

Cat. No.	Model number	Manual name	Application	Description
W521	NX-ID□□□□ NX-IA□□□□ NX-OD□□□□ NX-OC□□□□ NX-MD□□□□	NX-series Digital I/O Units User's Manual	Learning how to use NX-series Digital I/O Units	The hardware, setup methods, and functions of the NX-series Digital I/O Units are described.

Terms and Conditions Agreement

Read and understand this catalog.
Please read and understand this catalog before purchasing the products. Please consult your OMRON representative if you have any questions or comments.

Warranties.
(a) Exclusive Warranty. Omron's exclusive warranty is that the Products will be free from defects in materials and workmanship for a period of twelve months from the date of sale by Omron (or such other period expressed in writing by Omron). Omron disclaims all other warranties, express or implied.
(b) Limitations. OMRON MAKES NO WARRANTY OR REPRESENTATION, EXPRESS OR IMPLIED, ABOUT NON-INFRINGEMENT, MERCHANTABILITY OR FITNESS FOR A PARTICULAR PURPOSE OF THE PRODUCTS. BUYER ACKNOWLEDGES THAT IT ALONE HAS DETERMINED THAT THE
PRODUCTS WILL SUITABLY MEET THE REQUIREMENTS OF THEIR INTENDED USE.
Omron further disclaims all warranties and responsibility of any type for claims or expenses based on infringement by the Products or otherwise of any intellectual property right. (c) Buyer Remedy. Omron's sole obligation hereunder shall be, at Omron's election, to (i) replace (in the form originally shipped with Buyer responsible for labor charges for removal or replacement thereof) the non-complying Product, (ii) repair the non-complying Product, or (iii) repay or credit Buyer an amount equal to the purchase price of the non-complying Product; provided that in no event shall Omron be responsible for warranty, repair, indemnity or any other claims or expenses regarding the Products unless Omron's analysis confirms that the Products were properly handled, stored, installed and maintained and not subject to contamination, abuse, misuse or inappropriate modification. Return of any Products by Buyer must be approved in writing by Omron before shipment. Omron Companies shall not be liable for the suitability or unsuitability or the results from the use of Products in combination with any electrical or electronic components, circuits, system assemblies or any other materials or substances or environments. Any advice, recommendations or information given orally or in writing, are not to be construed as an amendment or addition to the above warranty.
See http://www.omron.com/global/ or contact your Omron representative for published information.

Limitation on Liability; Etc.
OMRON COMPANIES SHALL NOT BE LIABLE FOR SPECIAL, INDIRECT, INCIDENTAL, OR CONSEQUENTIAL DAMAGES, LOSS OF PROFITS OR PRODUCTION OR COMMERCIAL LOSS IN ANY WAY CONNECTED WITH THE PRODUCTS, WHETHER SUCH CLAIM IS BASED IN CONTRACT, WARRANTY, NEGLIGENCE OR STRICT LIABILITY.
Further, in no event shall liability of Omron Companies exceed the individual price of the Product on which liability is asserted.

Suitability of Use.
Omron Companies shall not be responsible for conformity with any standards, codes or regulations which apply to the combination of the Product in the Buyer's application or use of the Product. At Buyer's request, Omron will provide applicable third party certification documents identifying ratings and limitations of use which apply to the Product. This information by itself is not sufficient for a complete determination of the suitability of the Product in combination with the end product, machine, system, or other application or use. Buyer shall be solely responsible for determining appropriateness of the particular Product with respect to Buyer's application, product or system. Buyer shall take application responsibility in all cases.
NEVER USE THE PRODUCT FOR AN APPLICATION INVOLVING SERIOUS RISK TO LIFE OR PROPERTY OR IN LARGE QUANTITIES WITHOUT ENSURING THAT THE SYSTEM AS A WHOLE HAS BEEN DESIGNED TO ADDRESS THE RISKS, AND THAT THE OMRON PRODUCT(S) IS PROPERLY RATED AND INSTALLED FOR THE INTENDED USE WITHIN THE OVERALL EQUIPMENT OR SYSTEM.

Programmable Products.
Omron Companies shall not be responsible for the user's programming of a programmable Product, or any consequence thereof.

Performance Data.
Data presented in Omron Company websites, catalogs and other materials is provided as a guide for the user in determining suitability and does not constitute a warranty. It may represent the result of Omron's test conditions, and the user must correlate it to actual application requirements. Actual performance is subject to the Omron's Warranty and Limitations of Liability.

Change in Specifications.
Product specifications and accessories may be changed at any time based on improvements and other reasons. It is our practice to change part numbers when published ratings or features are changed, or when significant construction changes are made. However, some specifications of the Product may be changed without any notice. When in doubt, special part numbers may be assigned to fix or establish key specifications for your application. Please consult with your Omron's representative at any time to confirm actual specifications of purchased Product.

Errors and Omissions.
Information presented by Omron Companies has been checked and is believed to be accurate; however, no responsibility is assumed for clerical, typographical or proofreading errors or omissions.

2019.12

In the interest of product improvement, specifications are subject to change without notice.

OMRON Corporation
Industrial Automation Company

http://www.ia.omron.com/

(c)Copyright OMRON Corporation 2019 All Right Reserved.