DOWNLOADED FROM SCATTS.CO.UK

OMRON

Industrial Robotics Automation Catalog

Product Datasheets

©OMRON, 2020

©OMRON, 2020

DOWNLOADED FROM SCATTS.CO.UK

DOWNLOADED FROM SCATTS.CO.UK

Omron's 5 benefits

The new Omron Robotic Automation enhances the most demanding manufacturing lines providing **5 main benefits**

Performance

Overall through-put is guaranteed by the synchronization of our Sysmac machine control with the new vision guided robots

DOWNLOADED FROM SCATTS.CO.UK

DOWNLOADED FROM SCATTS.CO.UK

Quick Delivery

5 huge automated warehouses to provide parts in short time.

Simple

Shortening the startup and maintenance time by the integrated software environment that controls the line.

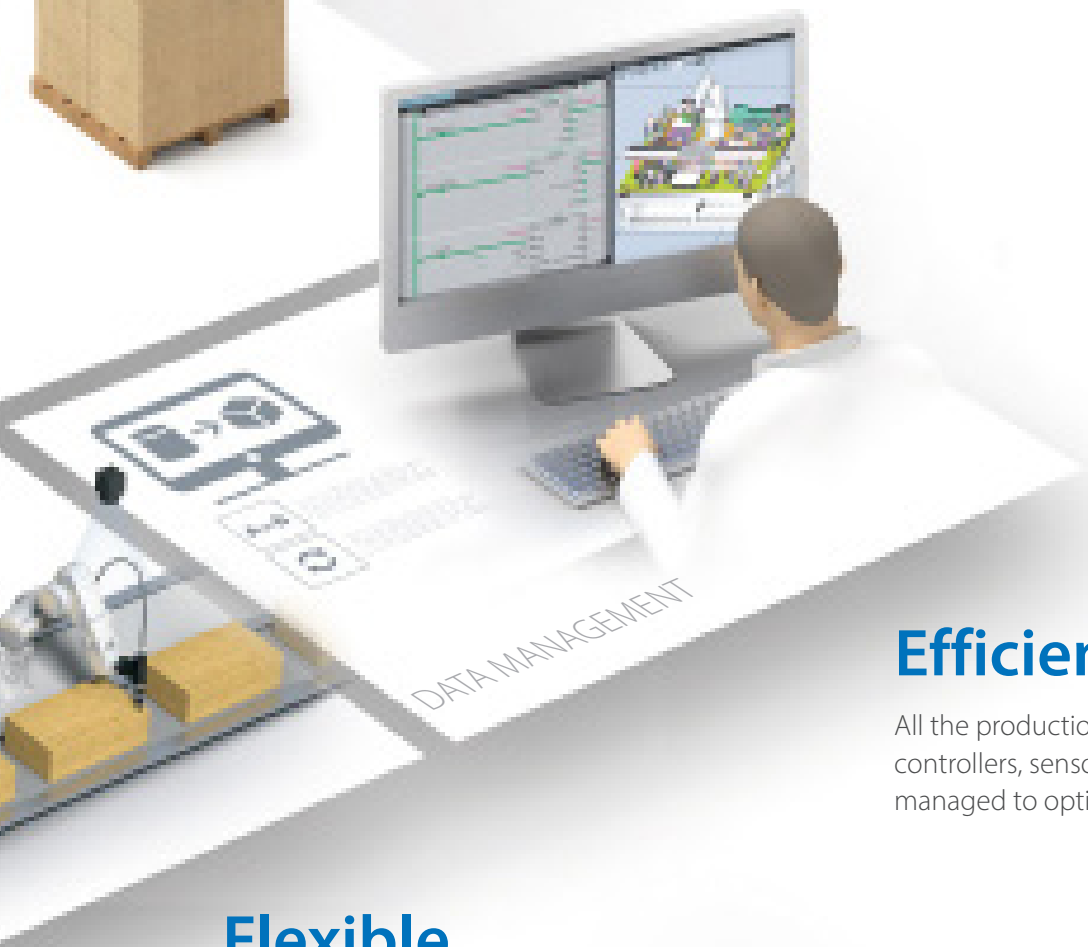

Efficient

All the production data coming from robots, controllers, sensors are collected, shared and managed to optimize the productivity.

Flexible

Software assisted system generates automatically the new programming code.

DOWNLOADED FROM SCATTS.CO.UK

DOWNLOADED FROM SCATTS.CO.UK

Industrial robots - Three robot families with over 100+ models

Manufacturing site innovation by using robots for various applications

Omron offers robotic automation solutions for applications from cutting-edge production facilities to manual operation processes by using our wide variety of control devices and integrating robotics into automation.

Parallel robots

Hornet and Quattro are high-speed parallel robots ideal for use in food and beverage, pharmaceutical, and packaging industries. Quattro is a four axis robot with high payload capacity that excels in high speed precision.

Hornet 565
Quattro 650/800

DOWNLOADED FROM SCATTS.CO.UK

DOWNLOADED FROM SCATTS.CO.UK

Viper 650/850

Articulated robots

Omron's 6-axis robot family is ideal for complex mechanical assemblies, material handling, inspection, and packaging.

Cobra 450/500/650
eCobra 600/800

SCARA robots

The high-performance four-axis SCARA product family is ideal for precise mechanical assembly, material handling, packaging, and screw driving.

DOWNLOADED FROM SCATTS.CO.UK

DOWNLOADED FROM SCATTS.CO.UK

Advanced Robotics Integrated Solution

The advanced robotics integrated solution is the world's first truly combined robotics and automation ecosystem designed to optimize the entire design and manufacturing cycle.

It provides a unified environment for Omron's strong robotics portfolio with the state of the art Omron NJ501-R machine controller and Sysmac Studio software.

Benefits

Control Integration
Simplify integration with unified control of robots and machines - traditionally performed by separate controllers - enabling intimate coordination between peripheral devices and robots to deliver automation systems that can achieve unprecedented levels of intricacy and dexterity.

Integration of building process
Seamlessly integrate the entire process flow - throughout design, commissioning , operation and its maintenance - to resolve labor shortage in both production line development and implementation, reduce time to market.

Components

OMRON ROBOTS
Our line of integrated eCobra SCARA robots now come with real-time EtherCAT connectivity to an Omron NJ501-R.

OMRON NJ501-R
Integrated machine and robotics controller that offers top performance and scalability, by seamlessly combining motion, robotics, logic, IO, and safety.

SYSMAC Studio
Unified software platform to simulate, deploy, control, and monitor robotics alongside the Omron automation ecosystem.

Application Manager
Application-level runtime environment for vision, recipe management and robot application modules like PackManager.

SCARA EtherCAT slave robot

Machine Automation Controller and robot EtherCAT master

Sysmac Studio software to simulate and program applications

DOWNLOADED FROM SCATTS.CO.UK

DOWNLOADED FROM SCATTS.CO.UK

Standalone Robotics

Our full portfolio of high performing, reliable, and industry-proven robots can optimally address the most demanding robotics applications.

By programing our robots with the simple and easy to use software, robot applications can be developed effortlessly and commissioned fast.

Benefits

Top Value
High performing robotics and flexible platform to integrate diverse robotics applications in auto, digital, pharma, and F&B industries.

Ease of Integration
Simplify integration with a powerful yet easy-to-use development environment for robotics, vision, feeding, and packaging applications.

Reliability
Long-lasting and proven hardware and software with thousands of robots deployed worldwide, backed-up by Omron's industry leading support network.

Components

OMRON Robotics
Our full line of SCARA, parallel, and articulated robots support traditional standalone deployments as well as connectivity to controllers.

Automated Control Environment (ACE)
PC-based development software to easily program Omron's portfolio of robots, vision and feeding systems.

Application Manager
Application-level runtime environment for vision, recipe management and robot application modules like PackManager.

ePLC
Software option to enable robot communication with Omron NX/NJ/NY or third party PLCs via Ethernet.

Full suite of robots with Ethernet connectivity

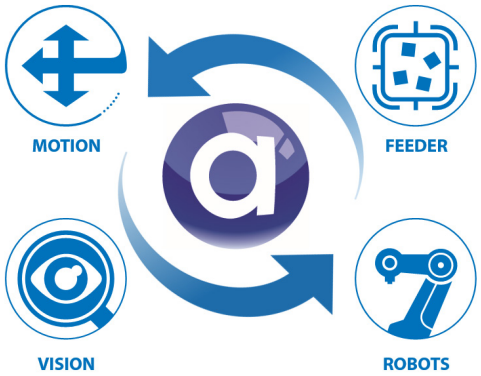

ACE software for application development

DOWNLOADED FROM SCATTS.CO.UK

DOWNLOADED FROM SCATTS.CO.UK

Robot Use Cases

Parallel Robot

	Recommended Process & Application	Hornet 565	Quattro 650/800
Food & Beverage	Primary Packing		◆
	Secondary Packing	◆	◆
	Aligning Packing	◆	◆
	Shipping and receiving (palletizing)		
Digital	Tightening units		
	General assembling		
	Deburring and polishing		
	Sealing		
	Measuring, inspection, testing		◆
Automotive	Resin molding		
	Press operation handling		
	Machine loading		
	Sealing		
	Measuring, inspection, testing		
	Material handling		
SPECS	Mounting	Inverted	
	Payload capacity	3 kg (8 kg *1)	650: 6 kg (15 kg *2) 800: 4 kg (kg *2)
	Radius	565 mm	650 to 800 mm
	Reach	---	---
	Position repeatability	±0.10 mm	±0.10 mm

*1. Without rotation axis
*2. Quattro using P30

DOWNLOADED FROM SCATTS.CO.UK

DOWNLOADED FROM SCATTS.CO.UK

SCARA Robot		Articulated Robot
Cobra 450/500/650	eCobra 600/800	Viper 650/850/Inverted
	◆	
	◆	◆
	◆	◆
◆	◆	◆
◆	◆	◆
◆	◆	◆
◆	◆	◆
◆	◆	◆
		◆
◆	◆	◆
◆	◆	◆
◆	◆	◆
◆	◆	◆
		◆
Table / Floor		Table / Floor / Inverted
5 kg	5.5 kg	5 kg
---	---	---
450 to 650 mm	600 to 800 mm	653 to 855 mm
±0.02 mm	±0.017 mm	±0.02 to 0.03 mm

DOWNLOADED FROM SCATTS.CO.UK

DOWNLOADED FROM SCATTS.CO.UK

Advanced Robotics Integrated Solution

iX3

iX4

DOWNLOADED FROM SCATTS.CO.UK

DOWNLOADED FROM SCATTS.CO.UK

Viper 650/850

eCobra 600/800

DOWNLOADED FROM SCATTS.CO.UK

iX3-565

EtherCAT (NJ501-R) version

Parallel robot ideal for use in the food and beverage, pharmaceutical, and healthcare industries

- EtherCAT connectivity to the Omron NJ501-R controller and programming through the familiar IEC 61131-3 programming language or scripting (ev+).
- Tracks up to a conveyor speed of 1.4 m/s
- Designed with a high payload to support multi-hand (multi-picking)
- Supports fast Pick & Place on a fast conveyor
- Helps reduce mounting cost and robot vibration
- Maximum working diameter 1,130 mm
- Working height 425 mm
- Maximum payload 8 kg
- Weight 52 kg

Specifications

Product name			iX3			
	Size		565			
	Number of axes		3 Axis		4 Axis	
	IP		Standard	IP65/67	Standard	IP65/67
Part Number			RX3-2065600	RX3-2065610	RX3-2065604	RX3-2065614
Mounting			inverted			
Working volume	X,Y axis (stroke)		1130 mm			
	Z axis (stroke)		425 mm			
	theta axis (rotation angle)		-		±360°	
Maximum Payload			8 kg		3 kg	
Repeatability			±0.10 mm			
Cycle times, sustained, 20°C ambient *1	Payload 0.1 kg		0.32 s		0.35 s	
	Payload 1.0 kg		0.34 s		0.37 s	
	Payload 3.0 kg		0.38 s		0.42 s	
Power Requirements			24 VDC: 6 A 200 to 240 VAC: 10 A, single-phase			
Protection	Base	Topside of robot	IP20	IP65	IP20	IP65
		Underside of robot	IP65			
	Platform, Arms		IP67			
Environment Requirements	Ambient Temperature		1 to 40°C			
	Humidity Range		5 to 90% (non-condensing)			
Weight			52 kg			
Basic configuration	Controller		iCS-ECAT			
	On-board I/O (Input/Output)		12/8			
	Conveyor tracking input		2			
	RS-232C serial communications port		1			
	Programming environment		Sysmac Studio 64-bit			
	ACE Sight		Yes			
	ePLC Connect		No			
	ePLC I/O		No			
Connectable controller *2			NJ501-R Series			

*1. Adept cycle, in mm (25/305/25)

DOWNLOADED FROM SCATTS.CO.UK

DOWNLOADED FROM SCATTS.CO.UK

Dimensions

(Unit: mm)

iX3

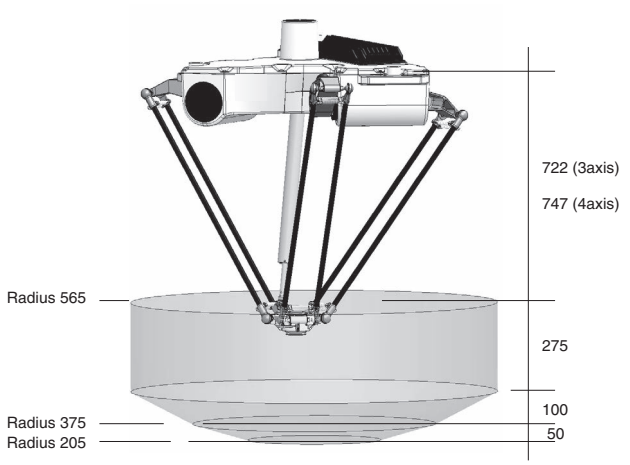

Flange

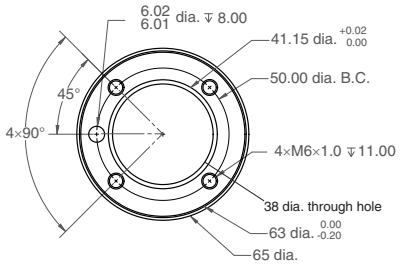

Footprint

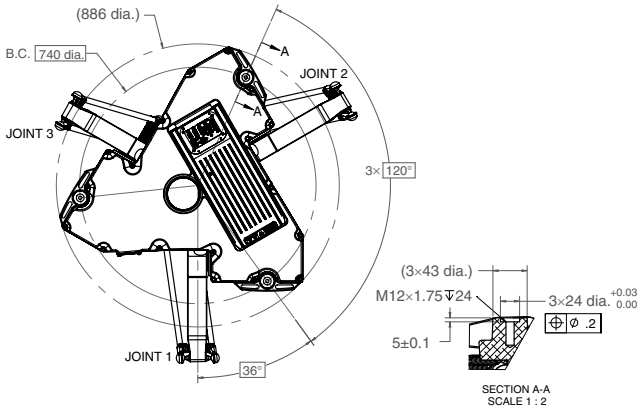

Front panel

Robot Parts Code and Bundled Accessories

Type	iX3	
IP	Standard	IP65/67
iX3 3 Axis	RX3-2065600	RX3-2065610
iX3 4 Axis	RX3-2065604	RX3-2065614
Overview	To be used in conjunction with NJ501-R Series controller, which can connect up to 8 robots via EtherCAT	
Bundled Accessories	• XSYSTEM cable with jumpers and Ethernet Management port,1.8 m/6 ft (13323-100) • Front panel kit (90356-10358)	

DOWNLOADED FROM SCATTS.CO.UK

iX4-650H/HS

EtherCAT (NJ501-R) version

Four-axis parallel robot achieves high speed and high precision

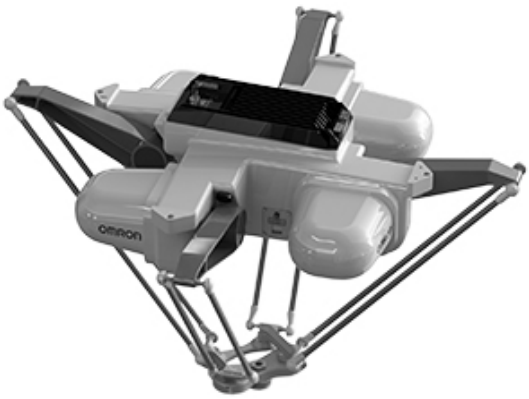

- EtherCAT connectivity to the Omron NJ501-R controller and programming through the familiar IEC 61131-3 programming language or scripting (ev+).
- Four-axis arm evenly distributes the load on the robot
- Fast and high-precision conveyance and assembly
- Designed with a high payload to support multi-hand (multi-picking)
- Supports fast Pick & Place on a fast conveyor
- Meets the sanitary standards of the United States Department of Agriculture for prevention of product contamination
- Maximum working diameter 1,300 mm
- Working height 500 mm
- Maximum payload 15 kg
- Weight 117 kg

Specifications

Product name			**iX4**		
	Size		**650**		
	Type		**H**		**HS**
	IP		**Standard**	**IP65/67**	**Standard**
Part Number			RX4-216600[]	RX4-216602[]	RX4-216601[]
Number of axes			4		
Mounting			inverted		
Working volume	**X,Y axis (stroke)**		1300 mm		
	Z axis (stroke)		500 mm		
	theta axis (rotation angle)		0° (fixed) (P30)		
			±46.25° (P31)		
			±92.5° (P32)		
			±185° (P34)		
Maximum Payload			6 kg (P30: 15 kg)		3 kg (P30: 12 kg)
Repeatability			±0.10mm		
Cycle times, sustained, at 20°C ambient	**Payload 0.1 kg**		0.30 s *1, 0.46 s *2		0.39 s *1, 0.55 s *2
	Payload 1.0 kg		0.36 s *1, 0.47 s *2		0.41 s *1, 0.58 s *2
	Payload 2.0 kg		0.37 s *1, 0.52 s *2		0.42 s *1, 0.59 s *2
	Payload 4.0 kg		0.41 s *1, 0.58 s *2		-
	Payload 6.0 kg		0.43 s *1, 0.61 s *2		-
Power Requirements			24 VDC: 11 A (eAIB, SmartController) 200 to 240 VAC: 10 A, single-phase		
Protection	**Base**	**Topside of robot**	IP20	IP65	IP66
		Underside of robot	IP65	IP65	IP66
	Platform, Arms		IP67		
Environment Requirements	**Ambient Temperature**		1 to 40°C		
	Humidity Range		5 to 90% (non-condensing)		
Weight			117 kg		
USDA-Accepted for meat and poultry processing			---	---	Yes
Basic configuration	**Controller**		iCS-ECAT		
	On-board I/O (Input/Output)		12/8		
	Conveyor tracking input		4		
	RS-232C serial communications port		1		
	Programming environment		Sysmac Studio 64-bit		
	ACE Sight		Yes		
	ePLC Connect		No		
	ePLC I/O		No		
Connectable controller *3			Omron NJ501-R Series		

*1. Adept cycle, in mm (25/305/25)
*2. Extended cycle, in mm (25/700/25)

DOWNLOADED FROM SCATTS.CO.UK

DOWNLOADED FROM SCATTS.CO.UK

Dimensions

(Unit: mm)

iX4-650H/HS

Note: The figure shows the HS type.

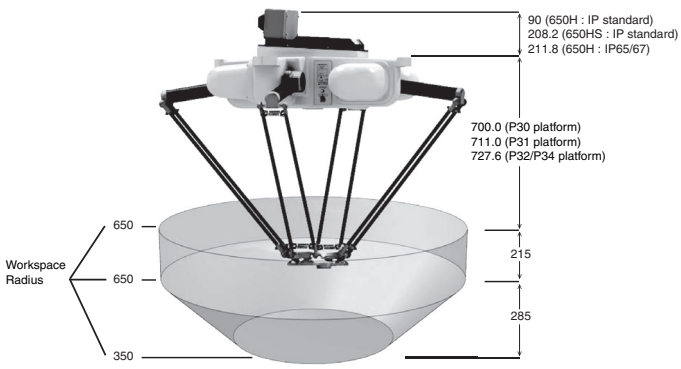

Front panel

Four choices of platform offer different ranges of rotation.

Appearance				
Type	P30	P31	P32	P34
Rotation angle	No rotation	±46.25°	±92.5°	±185°
Maximum Payload	H: 15 kg, HS: 12 kg	H: 6 kg, HS: 3 kg	H: 6 kg, HS: 3 kg	H: 6 kg, HS: 3 kg

Note: The platform appearances of the H type are shown above. The platform of the HS type is made of stainless steel.

Robot Parts Code and Bundled Accessories

Type	iX4		
IP	**Standard (H)**	**Standard (HS)**	**IP65/67**
iX4 P30	RX4-2166000	RX4-2166010	RX4-2166020
iX4 P31	RX4-2166001	RX4-2166011	RX4-2166021
iX4 P32	RX4-2166002	RX4-2166012	RX4-2166022
iX4 P34	RX4-2166004	RX4-2166014	RX4-2166024
Overview	To be used in conjunction with NJ501-R Series controller, which can connect up to 8 robots via EtherCAT		
Bundled Accessories	• XSYSTEM cable with jumpers and Ethernet Management port, 1.8 m/6 ft (13323-100) • Front panel kit (90356-10358)		

DOWNLOADED FROM SCATTS.CO.UK

iX4-800H/HS

EtherCAT (NJ501-R) version

Four-axis parallel robot achieves high speed and high precision

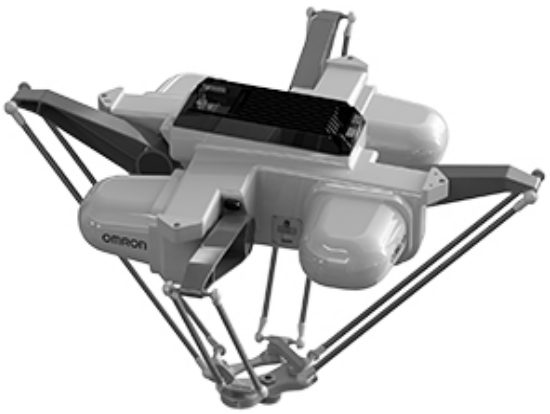

- EtherCAT connectivity to the Omron NJ501-R controller and programming through the familiar IEC 61131-3 programming language or scripting (ev+).
- Four-axis arm evenly distributes the load on the robot
- Fast and high-precision conveyance and assembly
- Designed with a high payload to support multi-hand (multi-picking)
- Supports fast Pick & Place on a fast conveyor
- Meets the sanitary standards of the United States Department of Agriculture for prevention of product contamination
- Maximum working diameter 1,600 mm
- Working height 500 mm
- Maximum payload 10 kg
- Weight 117 kg

Specifications

Product name			**iX4**		
	Size		**800**		
	Type		**H**		**HS**
	IP		**Standard**	**IP65/67**	**Standard**
Part Number			RX4-216630[]	RX4-216632[]	RX4-216631[]
Number of axes			4		
Mounting			inverted		
Working volume	**X,Y axis (stroke)**		1600 mm		
	Z axis (stroke)		500 mm		
	theta axis (rotation angle)		0° (fixed) (P30)		
			±46.25° (P31)		
			±92.5° (P32)		
			±185° (P34)		
Maximum Payload			4 kg (P30:10 kg)		1 kg (P30: 7 kg)
Repeatability			±0.10 mm		
Cycle times, sustained (at 20°C ambient)	**Payload 0.1 kg**		0.33 s *1, 0.48 s *2		-
	Payload 1.0 kg		0.38 s *1, 0.50 s *2		0.45 s *1, 0.62 s *2
	Payload 2.0 kg		0.40 s *1, 0.55 s *2		-
	Payload 4.0 kg		0.45 s *1, 0.62 s *2		-
Power Requirements			24 VDC: 11 A (eAIB, SmartController) 200 to 240 VAC: 10 A, single-phase		
Protection	**Base**	**Topside of robot**	IP20	IP65	IP66
		Underside of robot	IP65	IP65	IP66
	Platform, Arms		IP67		
Environment Requirements	**Ambient Temperature**		1 to 40°C		
	Humidity Range		5 to 90% (non-condensing)		
USDA-Accepted for meat and poultry processing			---	---	Yes
Weight			117 kg		
Basic configuration	**Controller**		iCS-ECAT		
	On-board I/O (Input/Output)		12/8		
	Conveyor tracking input		4		
	RS-232C serial communications port		1		
	Programming environment		Sysmac Studio 64-bit		
	ACE Sight		Yes		
	ePLC Connect		No		
	ePLC I/O		No		
Connectable controller *3			Omron NJ501-R Series		

*1. Adept cycle, in mm (25/305/25)
*2. Extended cycle, in mm (25/700/25)

DOWNLOADED FROM SCATTS.CO.UK

DOWNLOADED FROM SCATTS.CO.UK

Dimensions

(Unit: mm)

iX4-800H/HS

Note: The figure shows the H type.

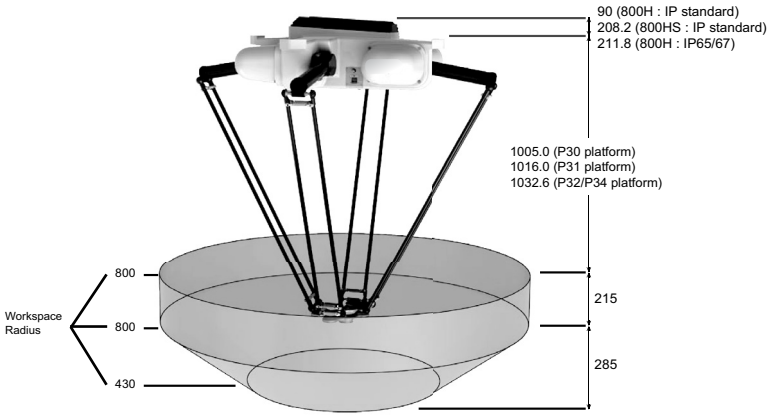

Front panel

Four choices of platform offer different ranges of rotation.

Appearance				
Type	P30	P31	P32	P34
Rotation angle	No rotation	±46.25°	± 92.5°	±185°
Maximum Payload	H: 10 kg, HS: 7 kg	H: 4 kg, HS: 1 kg	H: 4 kg, HS: 1 kg	H: 4 kg, HS: 1 kg

Note: The platform appearances of the H type are shown above. The platform of the HS type is made of stainless steel.

Robot Parts Code and Bundled Accessories

Type	**ix4**		
IP	**Standard (H)**	**Standard (HS)**	**IP65/67**
iX4 P30	RX4-2166300	RX4-2166310	RX4-2166320
iX4 P31	RX4-2166301	RX4-2166311	RX4-2166321
iX4 P32	RX4-2166302	RX4-2166312	RX4-2166322
iX4 P34	RX4-2166304	RX4-2166314	RX4-2166324
Overview	To be used in conjunction with NJ501-R Series controller, which can connect up to 8 robots via EtherCAT		
Bundled Accessories	• XSYSTEM cable with jumpers and Ethernet Management port,1.8 m/6 ft (13323-100) • Front panel kit (90356-10358)		

DOWNLOADED FROM SCATTS.CO.UK

i4-650H/750H/850H EtherCAT (NJ501-R) version

New i4H robot for precision machining, assembly, and material handling

- EtherCAT connectivity to the Omron NJ501-R controller and programming through the familiar IEC 61131-3 programming language or scripting (ev+).
- Simple integration with EtherCAT controller integrated into the robot base.
- Easy to service with high visibility, multi-colored light ring and display to show the robot status
- Reach Options: 650mm, 750mm, 850mm
- Weight 650: 50.4kg ; 750: 50.9kg ; 850: 51.6kg

Specifications

Product		i4-650H		i4-750H		i4-850H	
Type		Standard		Standard		Standard	
Quill Length (mm)		210mm	410mm	210mm	410mm	210mm	410mm
Part Number		RS4-2066502	RS4-2066504	RS4-2067502	RS4-2067504	RS4-2068502	RS4-2068504
Number of axes		4					
Mounting		Table					
Reach (mm)		650		750		850	
Maximum Payload (kg)		15					
Repeatability	XY (mm)	±.0.015		±.0.025		±.0.025	
	Z (mm)	±.0.01		±.0.01		±.0.01	
	Theta (deg)	±.0.005		±.0.005		±.0.005	
Joint Range	Joint 1 (deg)	±152					
	Joint 2 (deg)	±140					
	Joint 3 (mm)	210mm (Standard Quill), 410mm (Long Quill)					
	Joint 4 (deg)***	±360					
Inertia Moment (Max.)	Joint 4 (kg m2)	0.5					
Maximum push force - vertical	Joint 3 (kgf)	60					
Joint Speeds	Joint 1 (deg/s)	450					
	Joint 2 (deg/s)	720					
	Joint 3 (mm/s)	1583					
	Joint 4 (deg/s)	2400					
Cycle times*	Burst (s)	0.44		0.44		0.44	
	Sustained (s)	0.48		0.54		0.54	
	Blended Burst (s)**	0.37		0.37		0.37	
Power Requirements		24V: 8A (max) 208VAC: 12.0A (max)					
Protection		IP20 / NEMA Type 1					
Environment Requirements	Ambient Temperature	5-40C					
	Humidity Range	5-90% non-condensing					
Weight (kg)		50.4		50.9		51.6	
Basic Configuration	Controller	iCS-ECAT					
	On-board I/O	12 inputs / 8 outputs					
	End of Arm ECAT Connection	1					
	Pneumatic connections	4x 6mm pneumatic connectors					
	Conveyor tracking input	2					
	RS-232C serial comm port	1					
	Programming	Sysmac Studio 64-bit					
	Vision Manager	Yes					
	Pack Manager	Yes					
Connectable Controller		IPC Application Controller					

*Adept cycle, in mm 25/305/25 (seconds, at 20C ambient) with 2.0kg payload
**Fast cycle, in mm (25/305/25) (seconds, at 20C ambient) with 2.0kg payload but with arc motion

DOWNLOADED FROM SCATTS.CO.UK

DOWNLOADED FROM SCATTS.CO.UK

Dimensions

i4 650 H Dimensions

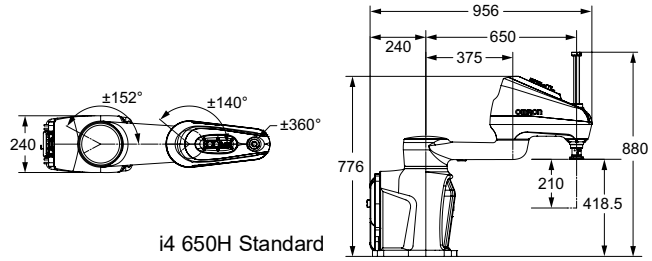

i4 650H Standard

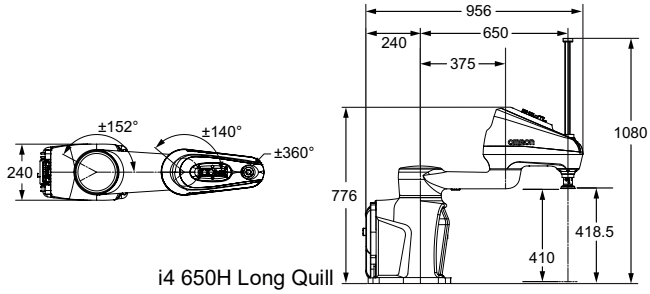

i4 650H Long Quill

i4 750H Dimensions

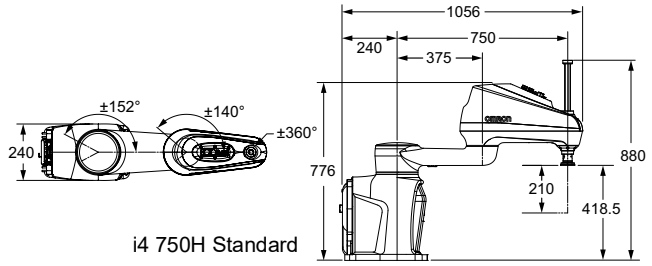

i4 750H Standard

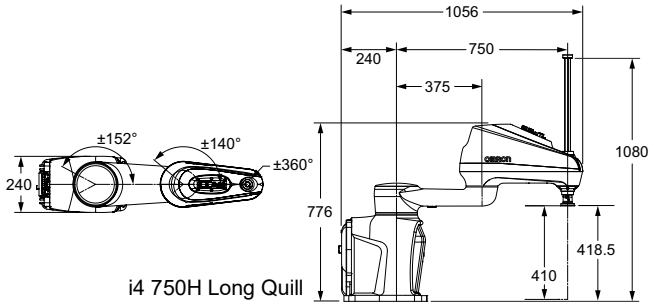

i4 750H Long Quill

i4 850H Dimensions

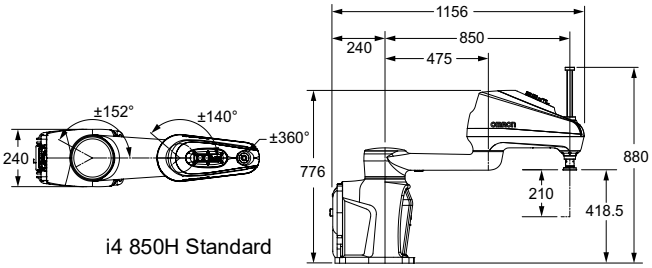

i4 850H Standard

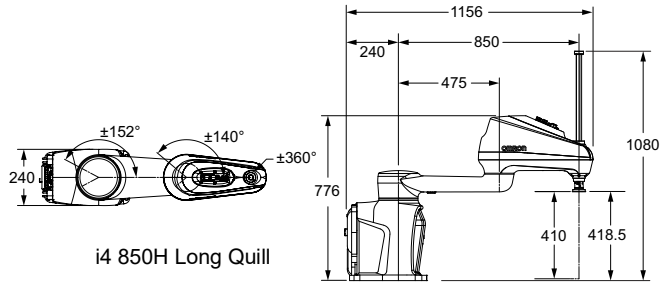

i4 850H Long Quill

Front Panel

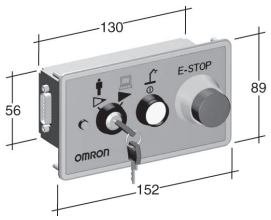

Tool Flange

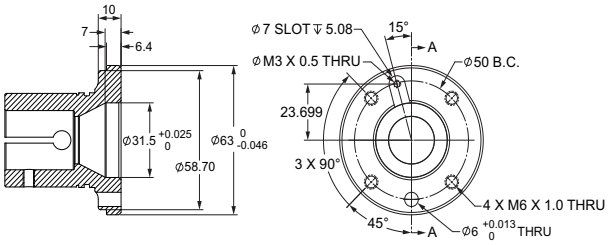

Mounting Flange

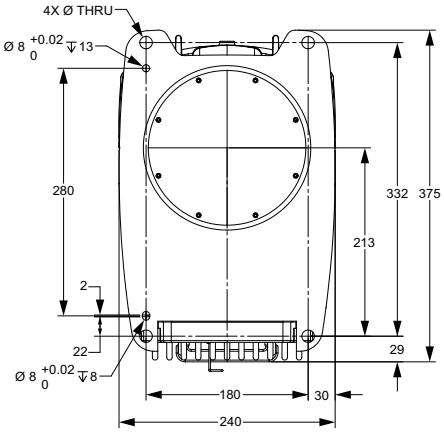

Robot Parts Code and Bundled Accessories

Product	i4-650H		i4-750H		i4-850H	
Type	Standard		Standard		Standard	
Quill Length	210mm	410mm	210mm	410mm	210mm	410mm
Overview	SCARA Robot Arm + Integrated iCS ECAT Controller					
Bundled Accessories	XSYSTEM cable with jumpers, and Ethernet Management port, 1.8m/6ft (13323-100) Front Panel Kit (90356-10358)					
Optional Accessories	Plate, eCobra Adapter (Allows i4H to be mounting with eCobra mount hole pattern) (21636-100) Camera Bracket Mount (18908-000)					

DOWNLOADED FROM SCATTS.CO.UK

i4-650H/750H/850H Inverted

EtherCAT (NJ501-R) version

New i4H robot for precision machining, assembly, and material handling

- EtherCAT connectivity to the Omron NJ501-R controller and programming through the familiar IEC 61131-3 programming language or scripting (ev+).
- Easy to service with high visibility, multi-colored light ring and display to show the robot status
- Reach Options: 650mm, 750mm, 850mm
- Weight 650: 50.4kg ; 750: 50.9kg ; 850: 51.6kg

Specifications

Product		i4-650H		i4-750H		i4-850H	
Type		Inverted		Inverted		Inverted	
Quill Length (mm)		210mm	410mm	210mm	410mm	210mm	410mm
Part Number		RS4-2066702	RS4-2066704	RS4-2067702	RS4-2067704	RS4-2068702	RS4-2068704
Number of axes		4					
Mounting		Ceiling					
Reach (mm)		650		750		850	
Maximum Payload (kg)		15					
Repeatability	XY (mm)	±.0.015		±.0.025		±.0.025	
	Z (mm)	±.0.01		±.0.01		±.0.01	
	Theta (deg)	±.0.005		±.0.005		±.0.005	
Joint Range	Joint 1 (deg)	±152					
	Joint 2 (deg)	±140					
	Joint 3 (mm)	210mm (Standard Quill), 410mm (Long Quill)					
	Joint 4 (deg)	±360					
Inertia Moment (Max.)	Joint 4 (kg m2)	0.5					
Maximum push force - vertical	Joint 3 (N)	60					
Joint Speeds	Joint 1 (deg/s)	450					
	Joint 2 (deg/s)	720					
	Joint 3 (mm/s)	1583					
	Joint 4 (deg/s)	2400					
Cycle times*	Burst (s)	0.44		0.44		0.44	
	Sustained (s)	0.48		0.54		0.54	
	Blended Burst (s)**	0.37		0.37		0.37	
Power Requirements		24V: 8A (max) 208VAC: 12A (max)					
Protection		IP20 / NEMA Type 1					
Environment Requirements	Ambient Temperature	5-40C					
	Humidity Range	5-90% non-condensing					
Weight (kg)		50.4		50.9		51.6	
Basic Configuration	Controller	iCS-ECAT					
	On-board I/O	12 inputs / 8 outputs					
	Pneumatic pass-through connections	1					
	Conveyor tracking input	4x 6mm pneumatic connectors					
	RS-232C serial comm port	2					
	Programming Environment	1					
	Vision Manager	Sysmac Studio 64-bit					
	Pack Manager	Yes					
Connectable Controller		Yes					

*Adept cycle, in mm 25/305/25 (seconds, at 20C ambient) with 2.0kg payload
**Fast cycle, in mm (25/305/25) (seconds, at 20C ambient) with 2.0kg payload but with arc motion

DOWNLOADED FROM SCATTS.CO.UK

DOWNLOADED FROM SCATTS.CO.UK

Dimensions

i4 650 H Dimensions

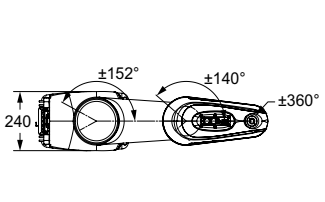

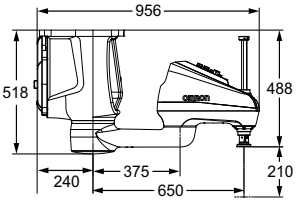

i4 650H Standard Inverted

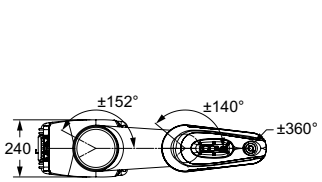

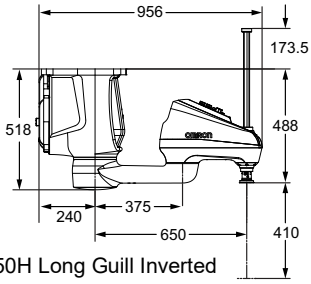

i4 650H Long Guill Inverted

i4 750H Dimensions

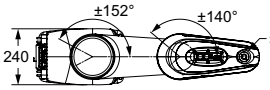

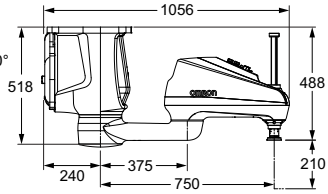

i4 750H Standard Inverted

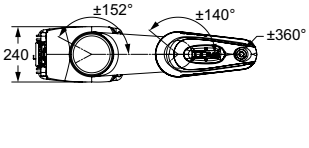

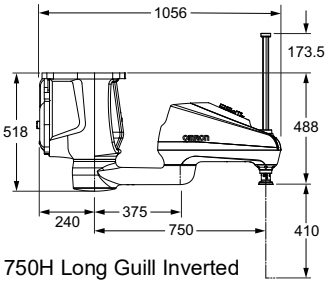

i4 750H Long Guill Inverted

i4 850H Dimensions

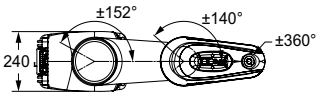

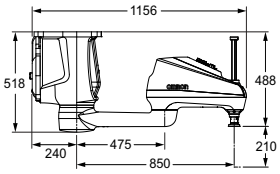

i4 850H Standard Inverted

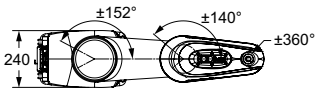

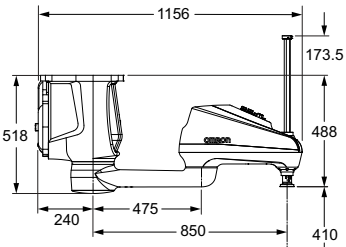

i4 850H Long Guill Inverted

Front Panel

Tool Flange

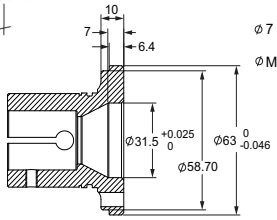

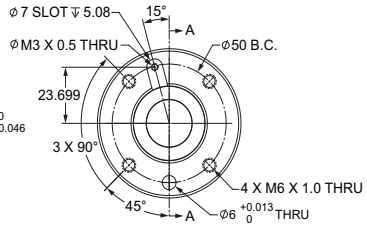

Mounting Flange

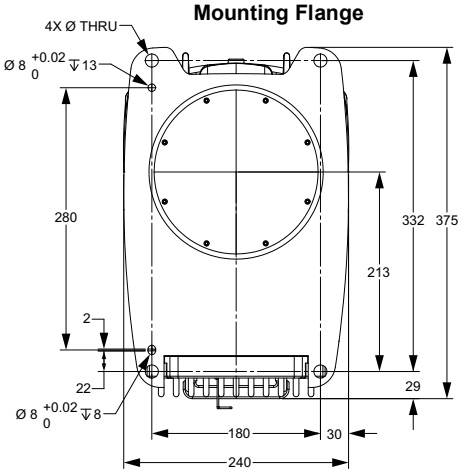

Robot Parts Code and Bundled Accessories

Product	i4-650H		i4-750H		i4-850H	
Type	Inverted		Inverted		Inverted	
Quill Length	210mm	410mm	210mm	410mm	210mm	410mm
Interface Panel Orientation	Rear Panel	Bottom Panel	Rear Panel	Bottom Panel	Rear Panel	Bottom Panel
Part Number	RS4-2066702	RS4-2066704	RS4-2067702	RS4-2067704	RS4-2068702	RS4-2068704
Overview	SCARA Robot Arm + Integrated iCS ECAT Controller					
Bundled Accessories	XSYSTEM cable with jumpers, and Ethernet Management port, 1.8m/6ft (13323-100) Front Panel Kit (90356-10358)					
Optional Accessories	Plate, eCobra Adapter (Allows i4H to be mounting with eCobra mount hole pattern) (21636-100) Camera Bracket Mount (18908-000)					

DOWNLOADED FROM SCATTS.CO.UK

eCobra 600

EtherCAT (NJ501-R) version

Mid-size SCARA robot for precision machining, assembly, and material handling

- EtherCAT connectivity to the Omron NJ501-R controller and programming through the familiar IEC 61131-3 programming language or scripting (eV+)
- High repeatability suitable for material handling and precision assembly
- High payload for screw-driving tools
- Amplifier and controller built into the robot simplifies integration
- Choose the right robot for you application from two different types
- Reach 600 mm
- Maximum payload 5.5 kg
- Weight 41 kg

Specifications

Product name		eCobra			
	Size	600			
	Type	600 Standard		600 Pro	
	Cleanroom	Standard	Cleanroom	Standard	Cleanroom
Part Number		RL4-1166000	RL4-1166010	RL4-2166000	RL4-2166010
Number of axes		4			
Mounting		table/floor			
Reach		600 mm			
Maximum Payload		5.5 kg			
Repeatability	XY	±0.017 mm			
	Z	±0.003 mm			
	Theta	±0.019°			
Joint Range	Joint 1	±105°			
	Joint 2	±157.5°			
	Joint 3	210 mm			
	Joint 4	±360°			
Inertia Moment (Max.)	Joint 4	450 kg-cm^2			
Joint Speeds	Joint 1	386°/s			
	Joint 2	720°/s			
	Joint 3	1100 mm/s			
	Joint 4	1200°/s			
Power Requirements		24 VDC: 6 A 200 to 240 VAC: 10 A, single-phase			
Protection		IP20			
Clean Class		---	Class 10	---	Class 10
Environment Requirements	Ambient Temperature	5 to 40°C			
	Humidity Range	5 to 90% (non-condensing)			
Weight		41 kg			
Basic configuration	Controller	iCS-ECAT			
	On-board I/O (Input/Output)	12/8, 4 Solenoid Output			
	Conveyor tracking input	No		2	
	RS-232C serial communications port	1			
	Programming environment	Sysmac Studio 64-bit			
	ACE Sight	Yes			
	ePLC Connect	No			
	ePLC I/O	No		No	
Connectable controller		Omron NJ501-R Series			

*1. Adept cycle, in mm 25/305/25 (seconds, at 20°C ambient)

DOWNLOADED FROM SCATTS.CO.UK

DOWNLOADED FROM SCATTS.CO.UK

Dimensions

(Unit: mm)

eCobra 600

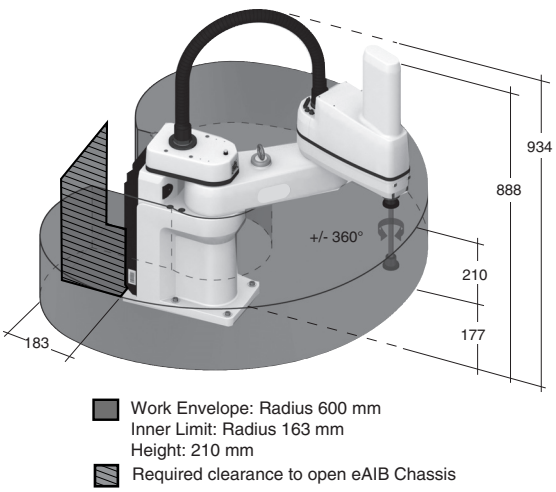

Flange

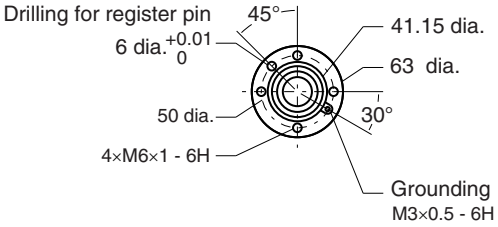

Footprint

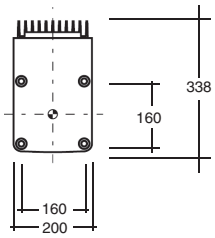

Front panel

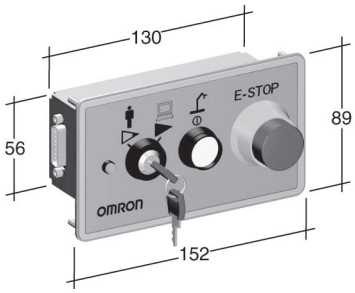

Robot Parts Code and Bundled Accessories

Type	eCobra	
Cleanroom	**Standard**	**Cleanroom**
eCobra 600 Standard	RL4-1166000	RL4-1166010
eCobra 600 Pro	RL4-2166000	RL4-2166010
Overview	Robot + iCS-ECAT	
Purpose	To be used in conjunction with NJ501-R controller, which can connect up to 8 robots via EtherCAT	
Bundled Accessories	• XSYSTEM cable with jumpers, and Ethernet Management port, 1,8 m/6ft (13323-100) • Front panel kit (90356-10358)	

DOWNLOADED FROM SCATTS.CO.UK

eCobra 800

EtherCAT (NJ501-R) version

Large SCARA robot for precision machining, assembly, and material handling

Pro

Standard

- EtherCAT connectivity to the Omron NJ501-R controller and programming through the familiar IEC 61131-3 programming language or scripting (eV+) .
- Reach is extended to 800 mm without compromising repeatability
- High payload for screw-driving tools
- The amplifier and controller built into the robot reduces simplifies integration
- Choose the right robot for you application from two different types
- Reach 800 mm
- Maximum payload 5.5 kg
- Weight 43 kg

Specifications

Product name		eCobra					
	Size	800					
	Type	800 Standard			800 Pro		
	Cleanroom/IP	Standard	Cleanroom	IP65	Standard	Cleanroom	IP65
Part Number		RL4-1168000	RL4-1168010	RL4-1168030	RL4-2168000	RL4-2168010	RL4-2168030
Number of axes		4					
Mounting		table/floor					
Reach		800 mm					
Maximum Payload		5.5 kg					
Repeatability	XY	±0.017 mm					
	Z	±0.003 mm					
	Theta	±0.019°					
Joint Range	Joint 1	±105°					
	Joint 2	±157.5°					
	Joint 3	210 mm					
	Joint 4	±360°					
Inertia Moment (Max.)	Joint 4	450 kg-cm^2					
Joint Speeds	Joint 1	386°/s					
	Joint 2	720°/s					
	Joint 3	1100 mm/s					
	Joint 4	1200°/s					
Power Requirements		24 VDC: 6 A 200 to 240 VAC: 10 A, single-phase					
Protection		IP20	IP20	IP65	IP20	IP20	IP65
Clean Class		---	Class 10	---	---	Class 10	---
Environment Requirements	Ambient Temperature	5 to 40°C					
	Humidity Range	5 to 90% (non-condensing)					
Weight		43 kg					
Basic configuration	Controller	ICS-ECAT					
	On-board I/O (Input/Output)	12/8, 4 Solenoid Output					
	Conveyor tracking input	No			2		
	RS-232C serial communications port	1					
	Programming environment	Sysmac Studio 64-bit					
	ACE Sight	Yes					
	ePLC Connect	No					
	ePLC I/O	No			No		
Connectable controller		Omron NJ501-R Series					

*1. Adept cycle, in mm 25/305/25 (seconds, at 20°C ambient)

DOWNLOADED FROM SCATTS.CO.UK

DOWNLOADED FROM SCATTS.CO.UK

Dimensions

(Unit: mm)

eCobra 800

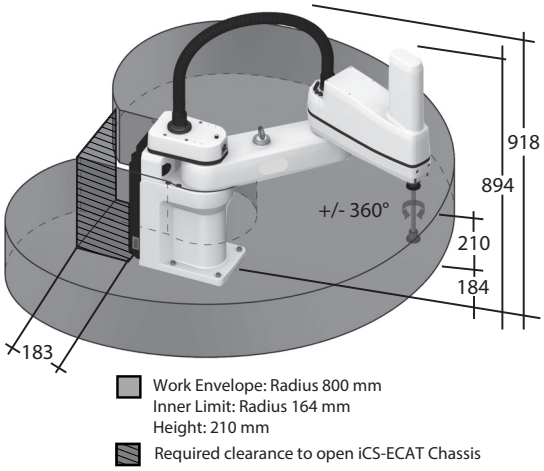

Flange

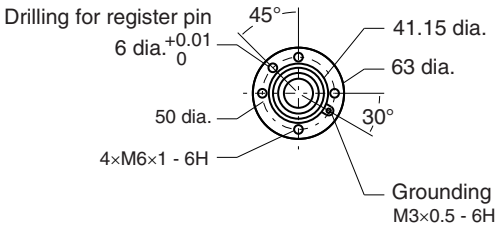

Footprint

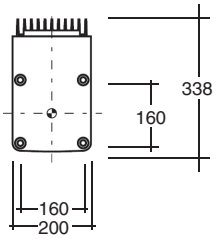

Front panel

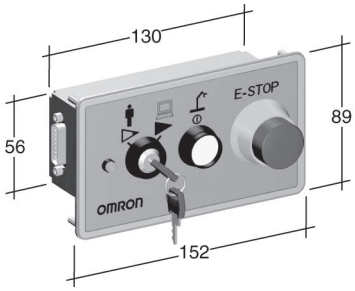

Robot Parts Code and Bundled Accessories

Type	eCobra		
Cleanroom/IP	**Standard**	**Cleanroom**	**IP65**
eCobra 800 Standard	RL4-1168000	RL4-1168010	RL4-1168030
eCobra 800 Pro	RL4-2168000	RL4-2168010	RL4-2168030
Overview	Robot + iCS-ECAT		
Purpose	To be used in conjunction with NJ501-R controller, which can connect up to 8 robots via EtherCAT		
Bundled Accessories	• XSYSTEM cable with jumpers and Ethernet Management port, 1,8 m/6ft (13323-100) • Front panel kit (90356-10358)		

DOWNLOADED FROM SCATTS.CO.UK

Viper 650

EtherCAT (NJ501-R) version

Articulated robot for machining, assembly, and material handling

- EtherCAT connectivity to the Omron NJ501-R controller and programming through the familiar IEC 61131-3 programming language or scripting (eV+).
- High-resolution, absolute encoders to provide high accuracy, superior slow-speed following, and easy calibration
- High-efficiency, low-inertia Harmonic Drives and a lightweight arm to deliver maximum acceleration
- Reach 653mm
- Maximum payload 5kg
- Weight 34kg

Specifications

Product name		Viper		
	Size	650		
	Cleanroom/IP	Standard	Cleanroom	IP54/65
Part Number		RL6-2066000	RL6-2066020	RL6-2066010
Mounting		Table/Floor/Inverted		
Number of axes		6		
Reach		653 mm		
Maximum Payload		5 kg		
Repeatability	XYZ	±0.02 mm		
Joint Range	Joint 1	±170°		
	Joint 2	-190°, +45°		
	Joint 3	-29°, +256°		
	Joint 4	±190°		
	Joint 5	±120°		
	Joint 6	±360°		
Inertia Moment (Max.)	Joint 4	0.295 kgm^2		
	Joint 5	0.295 kgm^2		
	Joint 6	0.045 kgm^2		
Joint Speeds	Joint 1	328°/s		
	Joint 2	300°/s		
	Joint 3	375°/s		
	Joint 4	375°/s		
	Joint 5	375°/s		
	Joint 6	600°/s		

Product name		Viper		
	Size	650		
	Cleanroom/IP	Standard	Cleanroom	IP54/65
Power Requirements		24 VDC: 6 A 200 to 240 VAC: 10 A, single-phase		
Protection	Base	IP40	IP40	IP54
	Robot Joints (J4, J5, J6)	IP40	IP40	IP65
Clean Class		---	Class10	---
Environment Requirements	Ambient Temperature	5 to 40°C		
	Humidity Range	5 to 90% (non-condensing)		
Weight		34 kg		
Basic configuration	Controller	eCS-ECAT		
	On-board I/O (Input/Output)	12/8		
	Conveyor tracking input	2		
	RS-232C serial communications port	1		
	Programming environment	Sysmac Studio 64-bit		
	ACE Sight	Yes		
	ePLC Connect	No		
	ePLC I/O	No		
Connectable controller		Omron NJ501-R Series		

DOWNLOADED FROM SCATTS.CO.UK

DOWNLOADED FROM SCATTS.CO.UK

Dimensions

(Unit: mm)

Viper 650

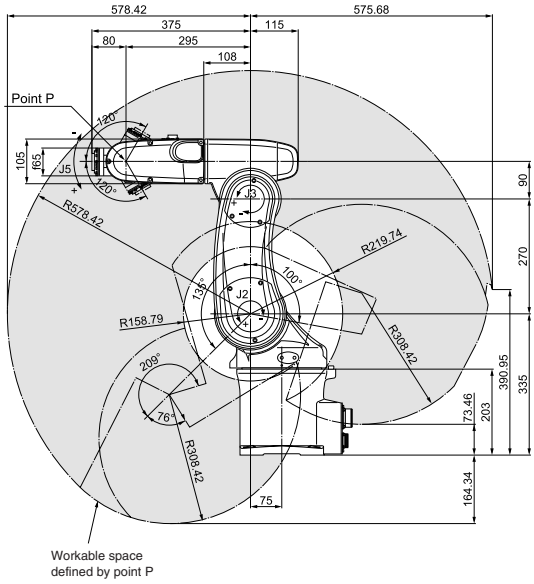

eCS-ECAT

Weight : 8.57 kg

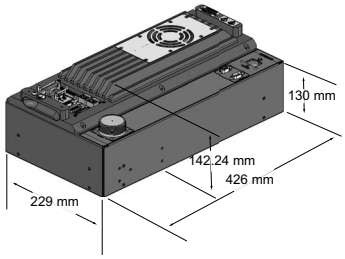

Front panel

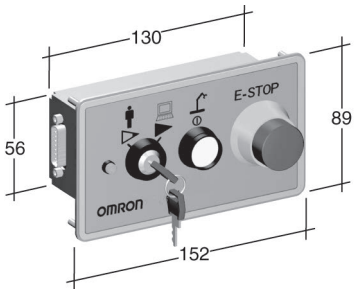

Footprint

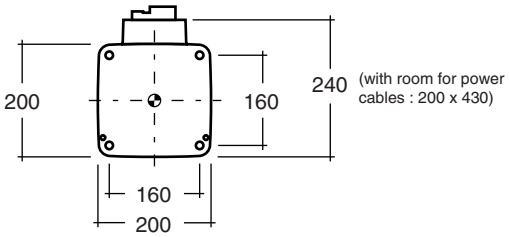

Flange

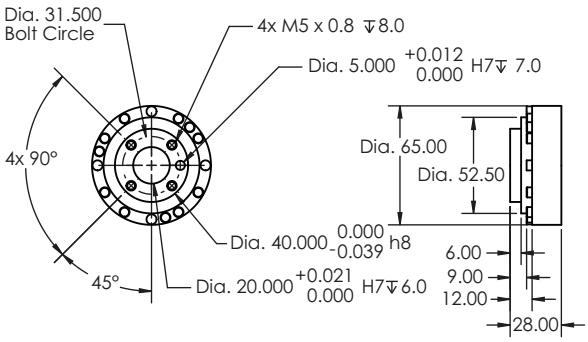

Robot Parts Code and Bundled Accessories

Type	Viper		
Cleanroom/IP	**Standard**	**Cleanroom**	**IP54/65**
Viper 650	RL6-2066000	RL6-2066020	RL6-2066010
Overview	Robot + eCS-ECAT Robot Controller		
Purpose	To be used in conjunction with NJ501-R Series controller, which can connect up to 8 robots via EtherCAT		
Bundled Accessories	• XSYSTEM cable with jumpers and Ethernet Management port, 1, 8m/6ft (13323-100) • Front Panel kit (90356-10358) • Arm power/signal cable, 4 m/13 ft -Standard Model: 05020-000 -Cleanroom & IP54/65 Models: 05463-000		

DOWNLOADED FROM SCATTS.CO.UK

Viper 850

EtherCAT (NJ501-R) version

Articulated robot for machining, assembly, and material handling

- EtherCAT connectivity to the Omron NJ501-R controller and programming through the familiar IEC 61131-3 programming language or scripting (ev+).
- High-resolution, absolute encoders to provide high accuracy, superior slow-speed following and easy calibration.
- High-efficiency, low-inertia Harmonic Drives and a lightweight arm to deliver maximum acceleration.
- Max Reach: 855mm
- Max Payload: 5kg
- Weight: 36kg

Specifications

Product name		Viper		
	Size	850		
	Cleanroom/IP	Standard	Cleanroom	IP54/65
Part Number		RL6-2068000	RL6-2068020	RL6-2068010
Mounting		Table/Floor/Inverted		
Number of axes		6		
Reach		855 mm		
Maximum Payload		5 kg		
Repeatability	XYZ	±0.03 mm		
Joint Range	Joint 1	±170°		
	Joint 2	-190°, +45°		
	Joint 3	-29°, +256°		
	Joint 4	±190°		
	Joint 5	±120°		
	Joint 6	±360°		
Inertia Moment (Max.)	Joint 4	0.295 kgm^2		
	Joint 5	0.295 kgm^2		
	Joint 6	0.045 kgm^2		
Joint Speeds	Joint 1	250°/s		
	Joint 2	250°/s		
	Joint 3	250°/s		
	Joint 4	375°/s		
	Joint 5	375°/s		
	Joint 6	600°/s		

Product name		Viper		
	Size	850		
	Cleanroom/IP	Standard	Cleanroom	IP54/65
Power Requirements		24 VDC: 6 A 200 to 240 VAC: 10 A, single-phase		
Protection	Base	IP40	IP40	IP54
	Robot Joints (J4, J5, J6)	IP40	IP40	IP65
Clean Class		---	Class10	---
Environment Requirements	Ambient Temperature	5 to 40°C		
	Humidity Range	5 to 90% (non-condensing)		
Weight		36 kg		
Basic configuration	Controller	eCS-ECAT		
	On-board I/O (Input/Output)	12/8		
	Conveyor tracking input	2		
	RS-232C serial communications port	1		
	Programming environment	Sysmac Studio 64-bit		
	ACE Sight	Yes		
	ePLC Connect	No		
	ePLC I/O	No		
Connectable controller		Omron NJ501-R Series		

DOWNLOADED FROM SCATTS.CO.UK

DOWNLOADED FROM SCATTS.CO.UK

Dimensions

(Unit: mm)

Viper 850

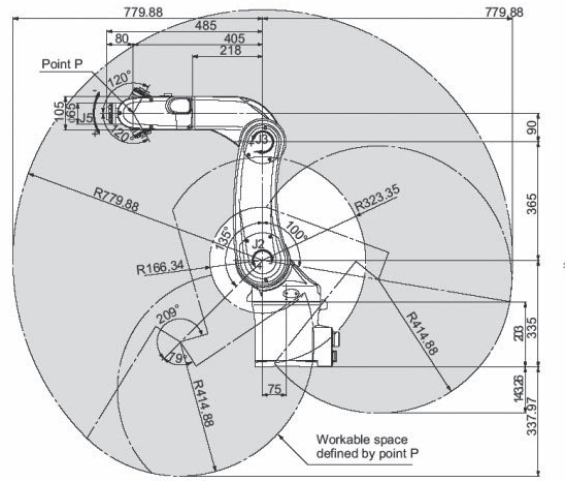

eCS-ECAT

Weight: 8.57 kg

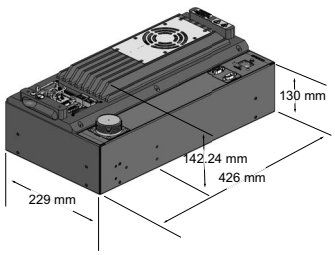

Front panel

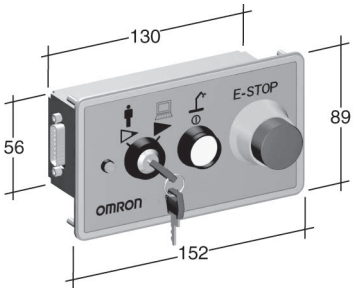

Footprint

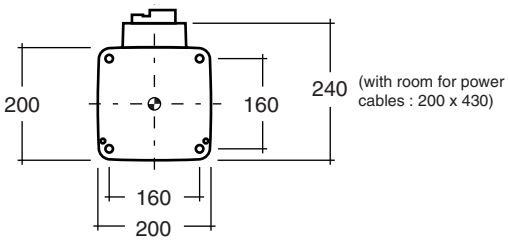

Flange

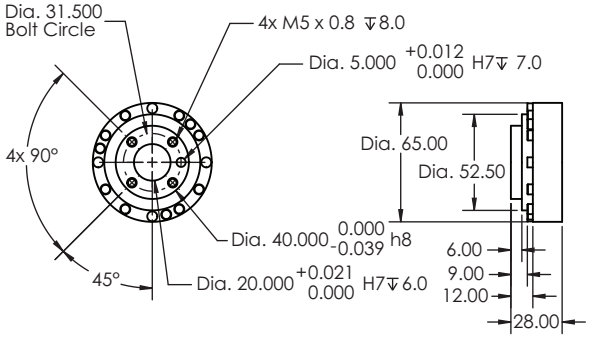

Robot Parts Code and Bundled Accessories

Type	Viper		
Cleanroom/IP	**Standard**	**Cleanroom**	**IP54/65**
Viper 850	RL6-2068000	RL6-2068020	RL6-2068010
Overview	Robot + eCS-ECAT Robot Controller		
Purpose	To be used in conjunction with NJ501-R Series controller, which can connect up to 8 robots via EtherCAT		
Bundled Accessories	• XSYSTEM cable with jumpers and Ethernet Management port, 1, 8m/6ft (13323-100) • Front panel kit (90356-10358) • Arm power/signal cable, 4 m/13 ft -Standard Model: 05020-000 -Cleanroom & IP54/65 Models: 05463-000		

DOWNLOADED FROM SCATTS.CO.UK

Machine Automation Controller

NJ501-R Series

Controller that covers functions and high-speed processing required for machine control and safety, reliability and maintainability.

- Integration of Robotics, Logic, and Motion in one CPU
- Conforms to IEC 61131-3 (JIS B 3503) standard programming and PLCopen function blocks for Motion Control
- Conforms to IEC 61131-3 (JIS B 3503) standard programming and traditional V+ scripting for robot and motion control
- Programming with variables allows users to create complex programs efficiently.
- Offers speed without compromising on reliability and robustness expected from PLCs.
- Complete RAS Functions: Transmission frame error check, timeout, bus diagnosis, Watchdog (WDT), memory check, and topology check, etc.
- Offers speed without compromising on reliability and robustness expected from PLCs.
- Linear and circular interpolation.
- Electronic gear and cam synchronization
- Fast and accurate control by synchronizing all EtherCAT devices, such as vision, servos, robots, and IO with the controller.
- Offers speed without compromising on reliability.

Specifications

Item		Product Description
Product Name		NJ501-R[ ][ ][ ]
Description		Machine controller with sequence, motion, and robotics functionality
Software		Sysmac Studio
Programming		IEC 61131-3 (Ladder, Structured Text, Function Blocks) eV+ Scripting
Program Capacity		20 MB
Memory Card		SD/SDHC memory card
Variable Capacity	**No retain attribute**	4 MB
	Retain attribute	2 MB
Built-in Ports		EtherCAT, Ethernet/IP, USB 2.0
Number of EtherCAT slaves		192
Max Number of robots		8
Max Number of Axes		64, 32, 16
Ordering Information		P072 Sysmac Catalog

DOWNLOADED FROM SCATTS.CO.UK

Automation Software

Sysmac Studio Ver.1 [] []

Sysmac studio for machine creators

Sysmac Studio provides an integrated development environment to CPU Units, NY-Series, Industrial PC, and other Machine Automation Controllers, as well as EtherCAT slaves

- One software for motion, logic sequencing, robots, safety, drives, vision and HMI.
- Fully compliant with open standard IEC 61131-3.
- Supports Ladder, Structured Text and Function Block programming with a rich instruction set and eV+ programming language for robotics.
- CAM editor for easy programming of complex motion profiles.
- Machine and Robot integrated simulation in a 3D environment.
- Advanced security function with 32 digit security password
- Capable of configuration robotics Application modules (Pack Manager, Robot Vision Manager).

System Requirements

Item	Product Description
Ordering Information	Sysmac Studio Ver.1.[ ] [ ] Datasheet

Item	Requirement
Operating system (OS) *1 *2	Windows 10 (64-bit)
CPU *2	DOS/V (IBM AT compatible machines) personal computers equipped with Intel® Core™ i5-3xxx (3rd generation: Ivy Bridge) or equivalent/later processors are required.
Main memory *2	4 GB min. 8 GB min. recommended.
Hard disk	Minimum 8 GB of Hard disk space is required to install.
Display	XGA 1024 × 768, 16 million colors. WXGA 1280 × 800 min. recommended
Communications ports	USB port corresponded to USB 2.0, or Ethernet port *3
Supported languages	Japanese, English, German, French, Italian, Spanish, simplified Chinese, traditional Chinese, Korean

***1.** Sysmac Studio Operating System Precaution: System requirements and hard disk space may vary with the system environment.
***2.** If you create a user program with a memory size over 20 MB, the personal computer equipped with Intel® Core™ i7 or an equal/faster processor and the RAM of 8 GB or more is recommended.
***3**. For hardware (e.g. PC and CPU unit) connection methods and cables, refer to each hardware manuals.
Note: System environment for 3D simulation Option is as follows.

- DOS/V (IBM AT compatible machines) personal computers equipped with Intel® Core™i5 8250U (1.60-3.40 GHz) or equivalent/faster processors Intel® Core™ i7 9750H min. recommended.
- 8 GB RAM min.
- 16 GB RAM min. recommended
- 1920 x 1080, 16 million colors full HD display min.

Video card: NVIDIA® GeForce® GTX1650 Ti min. recommended

DOWNLOADED FROM SCATTS.CO.UK

DOWNLOADED FROM SCATTS.CO.UK

Sysmac Studio 3D Simulation

Sysmac Studio 3D Simulation simplifies operational simulations of manufacturing facilities by simply adding optional licenses for simulation functions to the Sysmac Studio programming software. Operational simulation of robots and peripheral equipment can be performed with high accuracy and real-time. In addition, this product enables visualization and preliminary verification of machine behavior before it is actually started up, thus the time required to confirm the production capacity of the equipment, start-up, and modification is shortened.

Main Features:

- Use only the Sysmac Studio with loaded 3D CAD data*1 for 3D simulations. Operation of a control program created during machine development can be verified in a virtual environment. This improves program accuracy during design, reducing rework at verification using physical devices and saving development time.
- Simulations can be used to test feasibility during process design or to share the same understanding between mechanical and electrical designers during operation design, improving design quality and engineering efficiency.

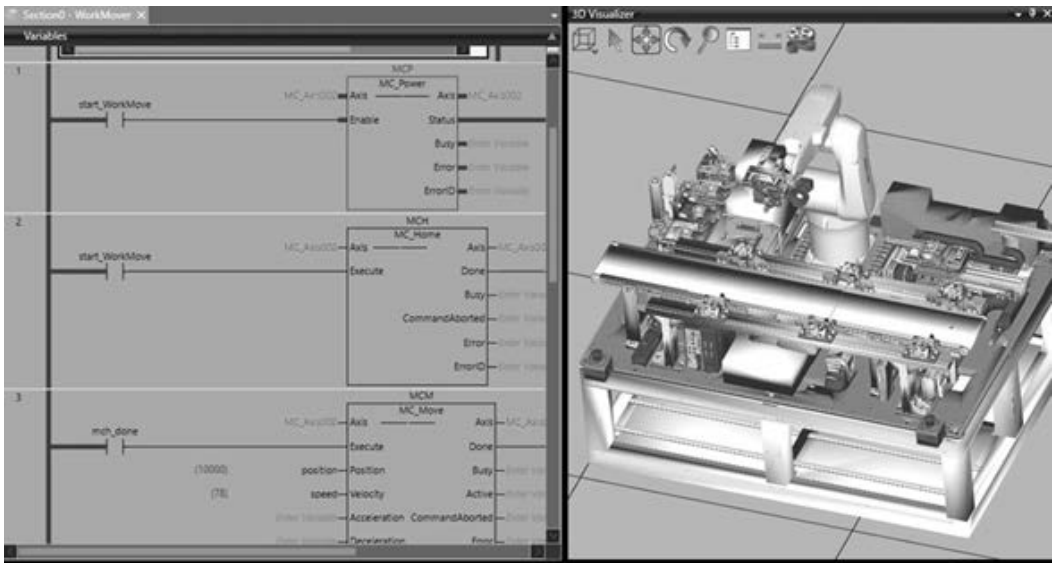

Item	Product Description
Ordering Information	Sysmac Studio Ver.1.[ ] [ ] Datasheet

1.* 3D CAD data supports STEP/IGES

Application Manager

Sysmac Studio provides another layer of simplification for Application development, by means of the Application Manager modules. These modules enable advanced programming capabilities for Packaging (PackManager) and Vision (Robot Vision Manager) applications.
PackManager can manage scalable packaging lines from integration to deployment and step-by-step guidance without scripting. The software walks you through the configuration of packaging application by setting up process-specific items, such as controllers, robots, and conveyor belts.

Main Features:

- Process Manager optimizes the resources, decreasing idle time and maximizing the amount of parts processed per robot.
- Fully customizable for any line configuration and advanced load balancing.

1.

DOWNLOADED FROM SCATTS.CO.UK

DOWNLOADED FROM SCATTS.CO.UK

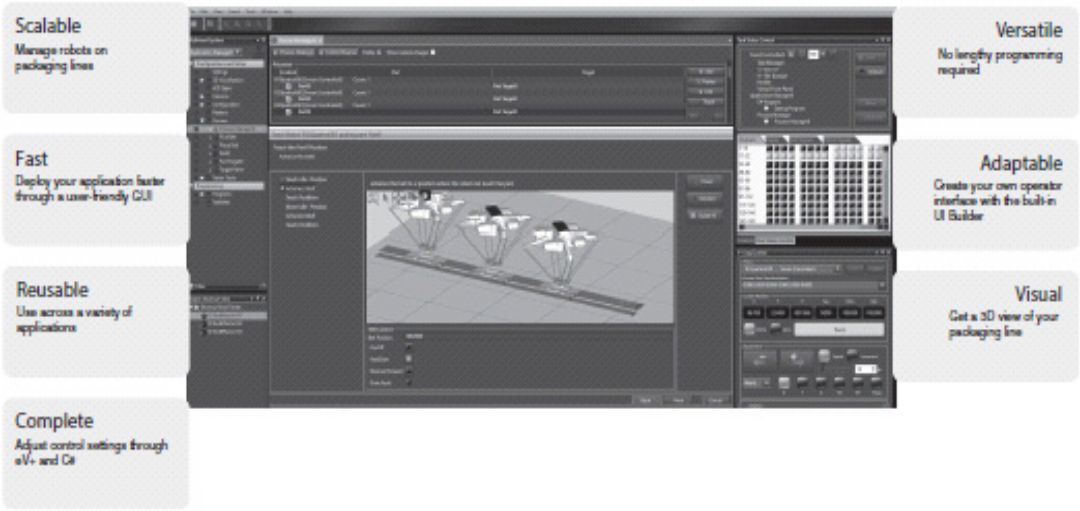

Robot Vision Manager provides algorithms and tools for easily integrated vision systems into robotic applications. Camera calibration, part identification, and image processing tools are supported as part of this Manager.

Application Manager modules are configured through Sysmac Studio and executed on Omron's IPC Application Controller.

Application Manager License Configuration

License	Part Number	Item
PackManager	**20409-000**	Enables full functionality of the PackManager software
Robot Vision Manager	**20410-000**	Enables the Robot Vision Manager functionality and inspection tools library
Dual (PackManager plus Vision)	**20433-000**	Enables functionality of both PackManager and Robot Vision Manager

System Requirements

Item	Requirement
Operating system (OS)	Windows 7 (64-bit version) / (Windows 10 (64-bit version)
CPU	Intel® Core™ i5 or equivalent or faster recommended.
Main memory	2 GB min.(8 BGB recommended)
Video memory	512 MB min.
Hard disk	At least 1 GB of available space
Display	XGA 1024 × 768, 16 million colors. WXGA 1280 × 800 min. recommended
Communications ports	USB port (for hardware key), Ethernet port
Supported languages	English, French, German, Japanese, Spanish, Italian, Korean, Simplified Chinese, Traditional Chinese

DOWNLOADED FROM SCATTS.CO.UK

DOWNLOADED FROM SCATTS.CO.UK

Standalone Robotics & Software

DOWNLOADED FROM SCATTS.CO.UK

DOWNLOADED FROM SCATTS.CO.UK

DOWNLOADED FROM SCATTS.CO.UK

Hornet 565

Parallel robot ideal for use in the food and beverage, pharmaceutical, and healthcare industries

- Programmable through ACE software and eV+ language, or through the familiar IEC 61131-3 when using ePLC Connect
- The amplifier and controller built into the robot reduces the number of cables
- Tracks up to a conveyor speed of 1.4 m/s
- Designed with a high payload to support multi-hand (multi-picking)
- Supports fast Pick & Place on a fast conveyor
- Helps reduce mounting cost and robot vibration
- Maximum working diameter 1,130 mm
- Working height 425 mm
- Maximum payload 8 kg
- Weight 52 kg

Specifications

Product name			Hornet			
	Size		565			
	Number of axes		3 Axis		4 Axis	
	IP		Standard	IP65/67	Standard	IP65/67
Part Number			1720[ ]-45600	1720[ ]-45610	1720[ ]-45604	1720[ ]-45614
Mounting			inverted			
Working volume	X,Y axis (stroke)		1130 mm			
	Z axis (stroke)		425 mm			
	theta axis (rotation angle)		-		±360°	
Maximum Payload			8 kg		3 kg	
Repeatability			±0.10 mm			
Cycle times, sustained, 20°C ambient *1	Payload 0.1 kg		0.32 s		0.35 s	
	Payload 1.0 kg		0.34 s		0.37 s	
	Payload 3.0 kg		0.38 s		0.42 s	
Power Requirements			24 VDC: 6 A 200 to 240 VAC: 10 A, single-phase			
Protection	Base	Topside of robot	IP20	IP65	IP20	IP65
		Underside of robot	IP65			
	Platform, Arms		IP67			
Environment Requirements	Ambient Temperature		1 to 40°C			
	Humidity Range		5 to 90% (non-condensing)			
Weight			52 kg			
Basic configuration	Controller		eAIB			
	On-board I/O (Input/Output)		12/8			
	Conveyor tracking input		2			
	RS-232C serial communications port		1			
	Programming environment		ACE, ePLC			
	ACE Sight		Yes			
	ePLC Connect		Yes			
	ePLC I/O		Yes			
Connectable controller *2			SmartController EX, NJ/NX/NY Series *3			

*1. Adept cycle, in mm (25/305/25)
*2. Choose a controller to suit your application.
*3. The robot version 2.3.C or later is required to connect with the NJ/NX/NY Series.

DOWNLOADED FROM SCATTS.CO.UK

DOWNLOADED FROM SCATTS.CO.UK

Dimensions

(Unit: mm)

Hornet 565

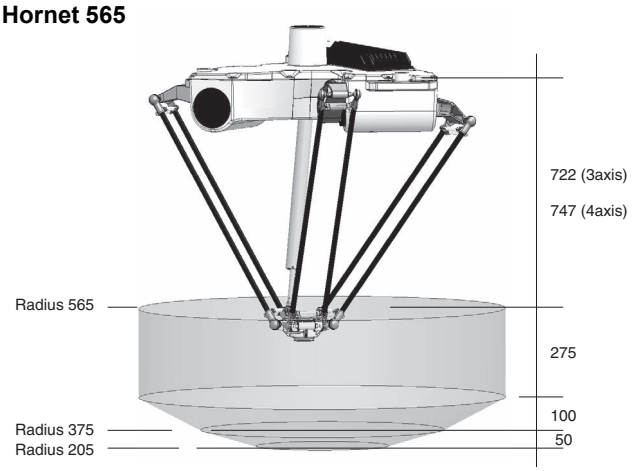

Flange

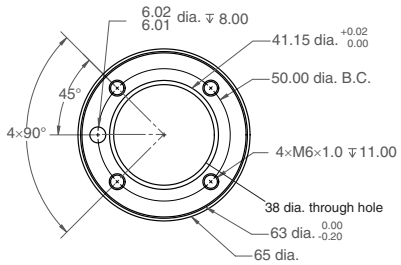

Footprint

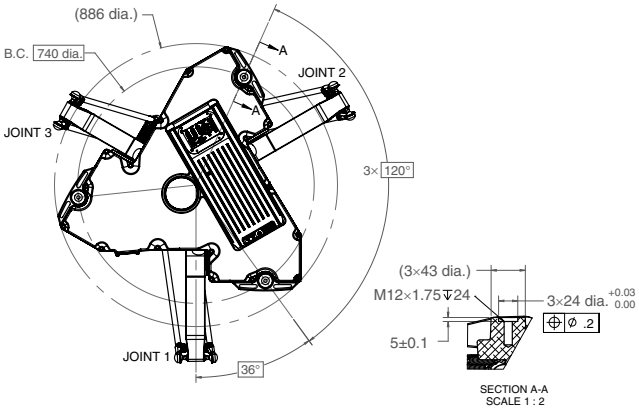

Front panel

Robot Parts Code and Bundled Accessories

Type	Hornet		Hornet Add-On	
IP	**Standard**	**IP65/67**	**Standard**	**IP65/67**
Hornet 565 3 Axis	17201-45600	17201-45610	17203-45600	17203-45610
Hornet 565 4 Axis	17201-45604	17201-45614	17203-45604	17203-45614
Overview	Robot + eAIB with fully integrated controller		Robot + eAIB required connection cables	
Purpose	Typical for use in single robot system		Typically added to systems with an existing SmartController EX to create multi-robot systems	
Bundled Accessories	• XSYSTEM cable with jumpers, 1.8 m/6 ft (13323-000) • Front panel kit (90356-10358)	• XSYSTEM cable with jumpers, 1.8 m/6 ft (13323-000) • Front panel kit (90356-10358) • Cable Seal Kit (08765-000)	• XSYSTEM cable with jumpers, 1.8 m/6 ft (13323-000) • XSYS cable, 4.5 m/15 ft (11585-000) • DB9 splitter (00411-000) • 1394 latch cable, 4.5 m/15 ft (13632-045) • eV+ license to connect to controller (14529-103)	• XSYSTEM cable with jumpers, 1.8 m/6 ft (13323-000) • XSYS cable, 4.5 m/15 ft (11585-000) • DB9 splitter (00411-000) • 1394 latch cable, 4.5 m/15 ft (13632-045) • eV+ license to connect to controller (14529-103) • Cable Seal Kit (08765-000)

DOWNLOADED FROM SCATTS.CO.UK

Quattro 650H/HS

Four-axis parallel robot achieves high speed and high precision

- Programmable through ACE software and eV+ language, or through the familiar IEC 61131-3 when using ePLC Connect.
- Four-axis arm evenly distributes the load on the robot
- Fast and high-precision conveyance and assembly
- Designed with a high payload to support multi-hand (multi-picking)
- Supports fast Pick & Place on a fast conveyor
- Meets the sanitary standards of the United States Department of Agriculture for prevention of product contamination
- Maximum working diameter 1,300 mm
- Working height 500 mm
- Maximum payload 15 kg
- Weight 117 kg

Specifications

Product name			Quattro		
	Size		650		
	Type		H		HS
	IP		Standard	IP65/67	Standard
Part Number			1721-2600[ ]	1721[ ]-2602[ ]	1721[ ]-2601[ ]
Number of axes			4		
Mounting			inverted		
Working volume	X,Y axis (stroke)		1300 mm		
	Z axis (stroke)		500 mm		
	theta axis (rotation angle)		0° (fixed) (P30)		
			±46.25° (P31)		
			±92.5° (P32)		
			±185° (P34)		
Maximum Payload			6 kg (P30: 15 kg)		3 kg (P30: 12 kg)
Repeatability			±0.10mm		
Cycle times, sustained, at 20°C ambient	Payload 0.1 kg		0.30 s *1, 0.46 s *2		0.39 s *1, 0.55 s *2
	Payload 1.0 kg		0.36 s *1, 0.47 s *2		0.41 s *1, 0.58 s *2
	Payload 2.0 kg		0.37 s *1, 0.52 s *2		0.42 s *1, 0.59 s *2
	Payload 4.0 kg		0.41 s *1, 0.58 s *2		-
	Payload 6.0 kg		0.43 s *1, 0.61 s *2		-
Power Requirements			24 VDC: 11 A (eAIB, SmartController) 200 to 240 VAC: 10 A, single-phase		
Protection	Base	Topside of robot	IP20	IP65	IP66
		Underside of robot	IP65	IP65	IP66
	Platform, Arms		IP67		
Environment Requirements	Ambient Temperature		1 to 40°C		
	Humidity Range		5 to 90% (non-condensing)		
Weight			117 kg		
USDA-Accepted for meat and poultry processing			---	---	Yes
Basic configuration	Controller		SmartController EX		
	On-board I/O (Input/Output)		12/8		
	Conveyor tracking input		4		
	RS-232C serial communications port		1		
	Programming environment		ACE, ePLC		
	ACE Sight		Yes		
	ePLC Connect		Yes		
	ePLC I/O		Yes		
Connectable controller *3			SmartController EX, NJ/NX/NY Series *4		

*1. Adept cycle, in mm (25/305/25)
*2. Extended cycle, in mm (25/700/25)
*3. Choose a controller to suit your application.
*4. The robot version 2.3.C or later is required to connect with the NJ/NX/NY Series.

DOWNLOADED FROM SCATTS.CO.UK

DOWNLOADED FROM SCATTS.CO.UK

Dimensions

(Unit: mm)

Quattro 650H/HS

Note: The figure shows the HS type.

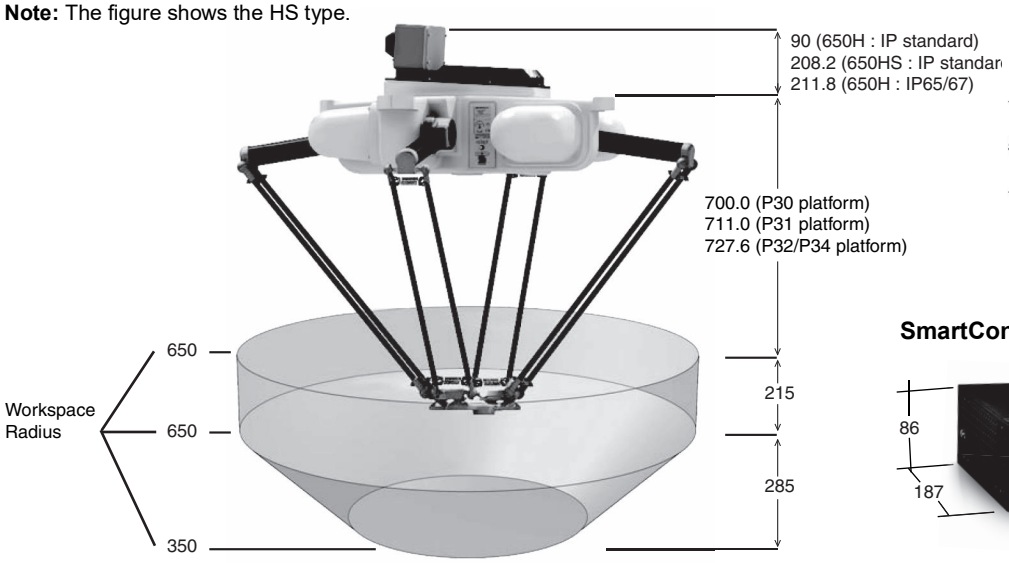

Front panel

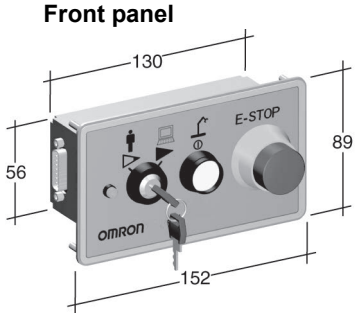

SmartController EX

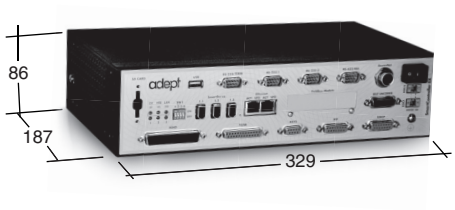

Four choices of platform offer different ranges of rotation.

Appearance				
Type	P30	P31	P32	P34
Rotation angle	No rotation	±46.25°	±92.5°	±185°
Maximum Payload	H: 15 kg, HS: 12 kg	H: 6 kg, HS: 3 kg	H: 6 kg, HS: 3 kg	H: 6 kg, HS: 3 kg

Note: The platform appearances of the H type are shown above. The platform of the HS type is made of stainless steel.

Robot Parts Code and Bundled Accessories

Type	Quattro with EX Controller			Quattro Add-On		
IP	**Standard (H)**	**Standard (HS)**	**IP65/67**	**Standard (H)**	**Standard (HS)**	**IP65/67**
Quattro P30	17214-26000	17214-26010	17214-26020	17213-26000	17213-26010	17213-26020
Quattro P31	17214-26001	17214-26011	17214-26021	17213-26001	17213-26011	17213-26021
Quattro P32	17214-26002	17214-26012	17214-26022	17213-26002	17213-26012	17213-26022
Quattro P34	17214-26004	17214-26014	17214-26024	17213-26004	17213-26014	17213-26024
Overview	Robot + eAIB+ SmartController EX + required connection cables			Robot + eAIB + required connection cables		
Purpose	Typical for use in single robot system and multi-robot systems.			Typically added to systems with an existing SmartController EX to create multi-robot systems		
Bundled Accessories	• SmartController EX (09200-000) • XSYS cable, 4.5 m/15 ft (11585-000) • 1394 latch cable, 4.5 m/15 ft (13632-045) • Front panel kit (90356-10358) • eV+ license to connect to controller (14529-103)	• SmartController EX (09200-000) • XSYS cable, 4.5 m/15 ft (11585-000) • 1394 latch cable, 4.5 m/15 ft (13632-045) • Front panel kit (90356-10358) • eV+ license to connect to controller (14529-103) • Cable Seal Kit (09564-000)	• SmartController EX (09200-000) • XSYS cable, 4.5 m/15 ft (11585-000) • 1394 latch cable, 4.5 m/15 ft (13632-045) • Front panel kit (90356-10358) • eV+ license to connect to controller (14529-103) • Cable Seal Kit (08765-000)	• XSYS cable, 4.5 m/15 ft (11585-000) • DB9 splitter (00411-000) • 1394 latch cable, 4.5 m/15 ft (13632-045) • eV+ license to connect to controller (14529-103)	• XSYS cable, 4.5 m/15 ft (11585-000) • DB9 splitter (00411-000) • 1394 latch cable, 4.5 m/15 ft (13632-045) • eV+ license to connect to controller (14529-103) • Cable Seal Kit (09564-000)	• XSYS cable, 4.5 m/15 ft (11585-000) • DB9 splitter (00411-000) • 1394 latch cable, 4.5 m/15 ft (13632-045) • eV+ license to connect to controller (14529-103) • Cable Seal Kit (08765-000)

DOWNLOADED FROM SCATTS.CO.UK

Quattro 800H/HS

Four-axis parallel robot achieves high speed and high precision

- Programmable through ACE software and eV+ language, or through the familiar IEC 61131-3 when using ePLC Connect
- Four-axis arm evenly distributes the load on the robot
- Fast and high-precision conveyance and assembly
- Designed with a high payload to support multi-hand (multi-picking)
- Supports fast Pick & Place on a fast conveyor
- Meets the sanitary standards of the United States Department of Agriculture for prevention of product contamination
- Maximum working diameter 1,600 mm
- Working height 500 mm
- Maximum payload 10 kg
- Weight 117 kg

Specifications

Product name			Quattro		
	Size		800		
	Type		H		HS
	IP		Standard	IP65/67	Standard
Part Number			1721[ ]-2630[ ]	1720[ ]-2632[ ]	1721[ ]-2631[ ]
Number of axes			4		
Mounting			inverted		
Working volume	X,Y axis (stroke)		1600 mm		
	Z axis (stroke)		500 mm		
	theta axis (rotation angle)		0° (fixed) (P30)		
			±46.25° (P31)		
			±92.5° (P32)		
			±185° (P34)		
Maximum Payload			4 kg (P30:10 kg)		1 kg (P30: 7 kg)
Repeatability			±0.10 mm		
Cycle times, sustained (at 20°C ambient)	Payload 0.1 kg		0.33 s *1, 0.48 s *2		-
	Payload 1.0 kg		0.38 s *1, 0.50 s *2		0.45 s *1, 0.62 s *2
	Payload 2.0 kg		0.40 s *1, 0.55 s *2		-
	Payload 4.0 kg		0.45 s *1, 0.62 s *2		-
Power Requirements			24 VDC: 11 A (eAIB, SmartController) 200 to 240 VAC: 10 A, single-phase		
Protection	Base	Topside of robot	IP20	IP65	IP66
		Underside of robot	IP65	IP65	IP66
	Platform, Arms		IP67		
Environment Requirements	Ambient Temperature		1 to 40°C		
	Humidity Range		5 to 90% (non-condensing)		
USDA-Accepted for meat and poultry processing			---	---	Yes
Weight			117 kg		
Basic configuration	Controller		SmartController EX		
	On-board I/O (Input/Output)		12/8		
	Conveyor tracking input		4		
	RS-232C serial communications port		3		
	Programming environment		ACE, ePLC		
	ACE Sight		Yes		
	ePLC Connect		Yes		
	ePLC I/O		Yes		
Connectable controller *3			SmartController EX, NJ/NX/NY Series *4		

*1. Adept cycle, in mm (25/305/25)
*2. Extended cycle, in mm (25/700/25)
*3. Choose a controller to suit your application.
*4. The robot version 2.3.C or later is required to connect with the NJ/NX/NY Series.

DOWNLOADED FROM SCATTS.CO.UK

DOWNLOADED FROM SCATTS.CO.UK

Dimensions

(Unit: mm)

Quattro 800H/HS

Note: The figure shows the H type.

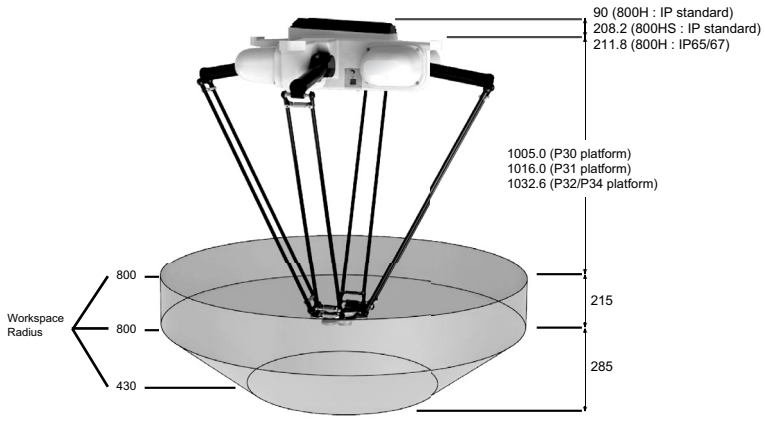

Front panel

SmartController EX

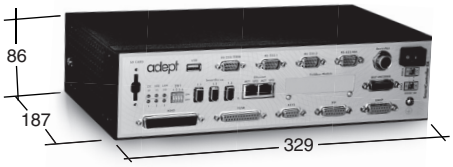

Four choices of platform offer different ranges of rotation.

Appearance				
Type	P30	P31	P32	P34
Rotation angle	No rotation	±46.25°	± 92.5°	±185°
Maximum Payload	H: 10 kg, HS: 7 kg	H: 4 kg, HS: 1 kg	H: 4 kg, HS: 1 kg	H: 4 kg, HS: 1 kg

Note: The platform appearances of the H type are shown above. The platform of the HS type is made of stainless steel.

Robot Parts Code and Bundled Accessories

Type	**Quattro with EX Controller**			**Quattro Add-On**		
IP	**Standard (H)**	**Standard (HS)**	**IP65/67**	**Standard (H)**	**Standard (HS)**	**IP65/67**
Quattro P30	17214-26300	17214-26310	17214-26320	17213-26300	17213-26310	17213-26320
Quattro P31	17214-26301	17214-26311	17214-26321	17213-26301	17213-26311	17213-26321
Quattro P32	17214-26302	17214-26312	17214-26322	17213-26302	17213-26312	17213-26322
Quattro P34	17214-26304	17214-26314	17214-26324	17213-26304	17213-26314	17213-26324
Overview	Robot + eAIB+ SmartController EX + required connection cables			Robot + eAIB + required connection cables		
Purpose	Typical for use in single robot system and multi-robot systems.			Typically added to systems with an existing SmartController EX to create multi-robot systems		
Bundled Accessories	• SmartController EX (09200-000) • XSYS cable, 4.5 m/15 ft (11585-000) • 1394 latch cable, 4.5 m/15 ft (13632-045) • Front panel kit (90356-10358) • eV+ license to connect to controller (14529-103)	• SmartController EX (09200-000) • XSYS cable, 4.5 m/15 ft (11585-000) • 1394 latch cable, 4.5 m/15 ft (13632-045) • Front panel kit (90356-10358) • eV+ license to connect to controller (14529-103) • Cable Seal Kit (09564-000)	• SmartController EX (09200-000) • XSYS cable, 4.5 m/15 ft (11585-000) • 1394 latch cable, 4.5 m/15 ft (13632-045) • Front panel kit (90356-10358) • eV+ license to connect to controller (14529-103) • Cable Seal Kit (08765-000)	• XSYS cable, 4.5 m/15 ft (11585-000) • DB9 splitter (00411-000) • 1394 latch cable, 4.5 m/15 ft (13632-045) • eV+ license to connect to controller (14529-103)	• XSYS cable, 4.5 m/15 ft (11585-000) • DB9 splitter (00411-000) • 1394 latch cable, 4.5 m/15 ft (13632-045) • eV+ license to connect to controller (14529-103) • Cable Seal Kit (09564-000)	• XSYS cable, 4.5 m/15 ft (11585-000) • DB9 splitter (00411-000) • 1394 latch cable, 4.5 m/15 ft (13632-045) • eV+ license to connect to controller (14529-103) • Cable Seal Kit (08765-000)

DOWNLOADED FROM SCATTS.CO.UK

i4-350L/450L/550L

New i4L robot for precision machining, assembly, and material handling

- High payload, inertia, and repeatability in a compact size for use in digital assembly applications.
- Compact, easy to install design. Mountable on table or wall without additional HW. Available with bottom or rear interface panel orientations.
- Easy to service with high visibility, multi-colored LED light dome provides convenient indication of the robot status.
- Reach Options: 350mm, 450mm, 550mm
- Maximum payload: 5kg
- Weight 350/450: 15kg; 550 (180mm): 16.38kg; 550 (350mm): 16.52kg

Specifications

Product		i4-350L		i4-450L		i4-550L			
Type		Standard		Standard		Standard		Long-Quill	
Interface Panel Orientation		Rear Panel	Bottom Panel	Rear Panel	Bottom Panel	Rear Panel	Bottom Panel	Rear Panel	Bottom Panel
Part Number		RS4-2053002	RS4-2053102	RS4-2054002	RS4-2054102	RS4-2055002	RS4-2055102	RS4-2055004	RS4-2055104
Number of axes		4							
Reach (mm)		350		450		550			
Maximum Payload (kg)		5							
Quill Length (mm)		180						350	
Repeatability	XY (mm)	±0.01		±0.01		±0.01		±0.01	
	Z (mm)	±0.01		±0.01		±0.01		±0.01	
	Theta (deg)	±0.01		±0.01		±0.01		±0.01	
Joint Range	Joint 1 (deg)	±135							
	Joint 2 (deg)	±135		±148					
	Joint 3 (mm)	180						350	
	Joint 4 (deg)	±360							
Inertia Moment (Max.)	Joint 4 (kg m2)	0.05							
Maximum push force - vertical	Joint 3 (N)	150							
Joint Speeds	Joint 1 (deg/s)	456							
	Joint 2 (deg/s)	456							
	Joint 3 (mm/s)	800							
	Joint 4 (deg/s)	6000							
Cycle times*	Burst (s)	0.54		0.48					
	Sustained (s)	0.57		0.57		0.54			
	Blended Burst (s)**	0.45		0.42		0.38			
Power Requirements		24VDC: 5A 48VDC:15A							
Protection		IP20 / NEMA Type 1							
Environment Requirements	Ambient Temperature	5-40C							
	Humidity Range	5-90% non-condensing							
Weight (kg)		15.08		15.9		16.38		16.52	
Basic Configuration	Controller	iCS-ENET							
	On-board I/O	8 outputs / 12 inputs (Primary Interface Panel) 4 outputs / 5 inputs (Secondary Interface Panel)							
	Pneumatic pass-through connections	3							
	Conveyor tracking input	2							
	RS-232C serial comm port	1							
	Programming Environment	ACE							
	Vision Manager	Yes							
	Pack Manager	Yes							
Connectable Controller		IPC Application Controller							

*Adept cycle, in mm 25/305/25 (seconds, at 20C ambient) with 2.0kg payload
**Fast cycle, in mm (25/305/25) (seconds, at 20C ambient) with 2.0kg payload but with arc motion

DOWNLOADED FROM SCATTS.CO.UK

DOWNLOADED FROM SCATTS.CO.UK

Dimensions

i4-350L Dimensions

i4 350L Work Envelope

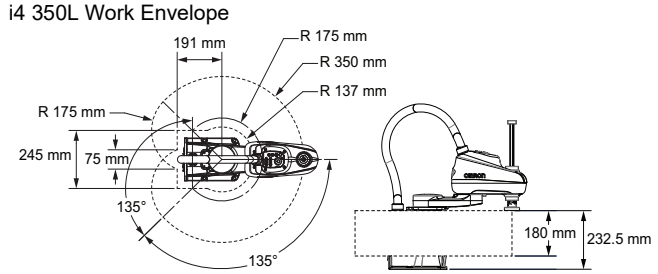

i4 450L Dimensions

i4 450L Work Envelope

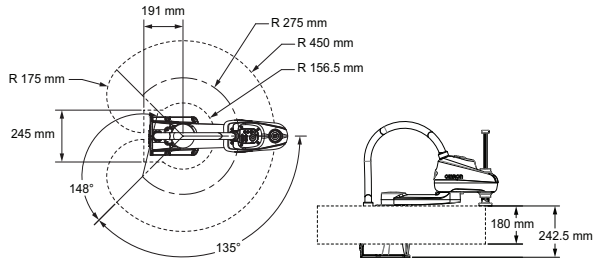

i4-550L Dimensions

i4 550L Work Envelope

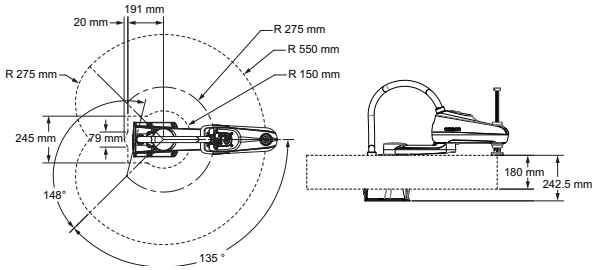

i4-550L Long Quill Dimensions

i4 550L Long Quill Work Envelope

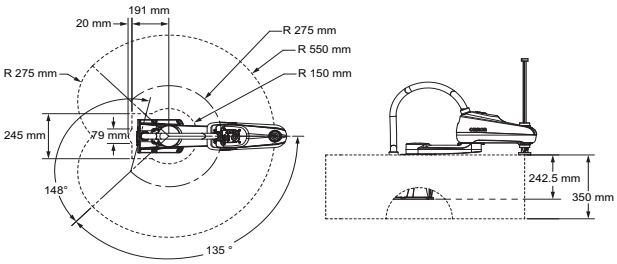

Mounting Options

Table Cable Exit Cut-Out Dimensions

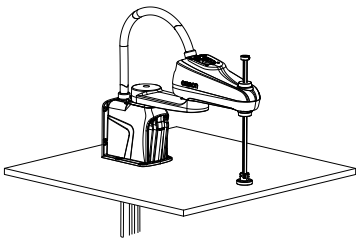

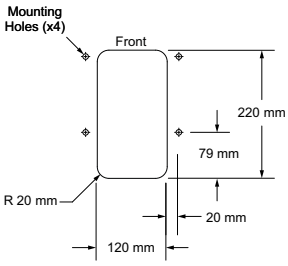

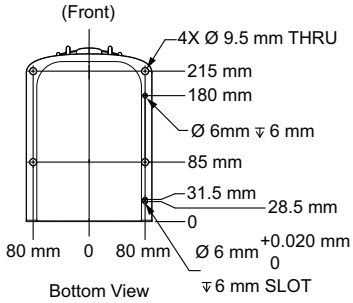

Wall Cable Exit Cut-Out Dimensions

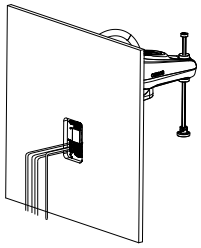

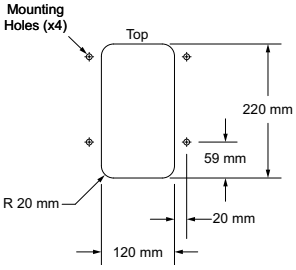

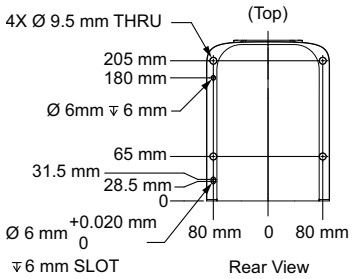

Flange

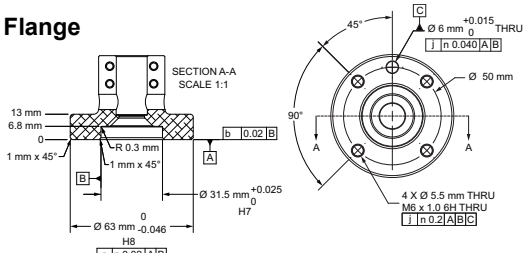

Front Panel

Robot Parts Code and Bundled Accessories

Product	i4-350L		i4-450L		i4-550L			
Type	Standard		Standard		Standard		Long-Quill	
Interface Panel Orientation	Rear Panel	Bottom Panel	Rear Panel	Bottom Panel	Rear Panel	Bottom Panel	Rear Panel	Bottom Panel
Part Number	RS4-2053002	RS4-2053102	RS4-2054002	RS4-2054102	RS4-2055002	RS4-2055102	RS4-2055004	RS4-2055104
Overview	SCARA Robot Arm + Integrated iCS ENET Controller							
Bundled Accessories	XSYSTEM cable with jumpers, and Ethernet Management port,1.8m/6ft (13323-100) Front Panel Kit (90356-10358)							

DOWNLOADED FROM SCATTS.CO.UK

Cobra 450

Mid-size SCARA robot for material handling, assembly, precision machining and adhesive application

- Programmable through ACE software and eV+ language, or through the familiar IEC 61131-3 when using ePLC Connect.
- Good repeatability for precision assembly
- High Payload for using tools for screw-driving and adhesive application
- Minimum footprint with separate controller
- Robot with integral power and signal cables
- Reach 450 mm
- Maximum Payload 5 kg
- Weight 29 kg

Specifications

Product name		Cobra
	Size	450
Part Number		1720[ ]-14500
Number of axes		4
Mounting		table/floor
Reach		450 mm
Maximum Payload		5 kg
Repeatability	XY	±0.02 mm
	Z	±0.01 mm
	Theta	±0.005°
Joint Range	Joint 1	±125°
	Joint 2	±145°
	Joint 3	200 mm
	Joint 4	±360°
Inertia Moment (Max.)	Joint 4	450 kg-cm^2
Joint Speeds	Joint 1	450°/s
	Joint 2	720°/s
	Joint 3	1100 mm/s
	Joint 4	1940°/s
Cycle times, *1 with 2.0 kg Payload	Burst	0.49 s
	Sustained	0.64 s
Power Requirements		24 VDC: 6 A 200 to 240 VAC: 10 A, single-phase
Protection		IP20
Clean Class		---
Environment Requirements	Ambient Temperature	5 to 40°C
	Humidity Range	35 to 90% (non-condensing)
Weight		29 kg
Basic configuration	Controller	eMotionBlox-40
	On-board I/O (Input/Output)	12/8
	Conveyor tracking input	2
	RS-232C serial communications port	1
	Programming environment	ACE, ePLC
	ACE Sight	Yes
	ePLC Connect	Yes
	ePLC I/O	Yes
Connectable controller *2		eMotionBlox-40M, SmartController EX, NJ/NX/NY Series

*1. Adept cycle, in mm 25/305/25 (seconds, at 20°C ambient)
*2. Choose a controller to suit your application.

DOWNLOADED FROM SCATTS.CO.UK

DOWNLOADED FROM SCATTS.CO.UK

Dimensions

(Unit: mm)

Cobra 450

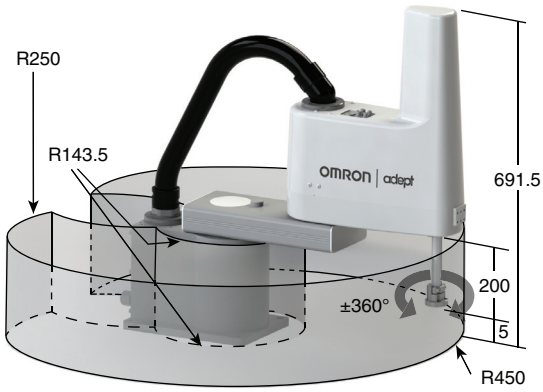

eMotionBlox-40M

Weight : 9.3 kg

Flange

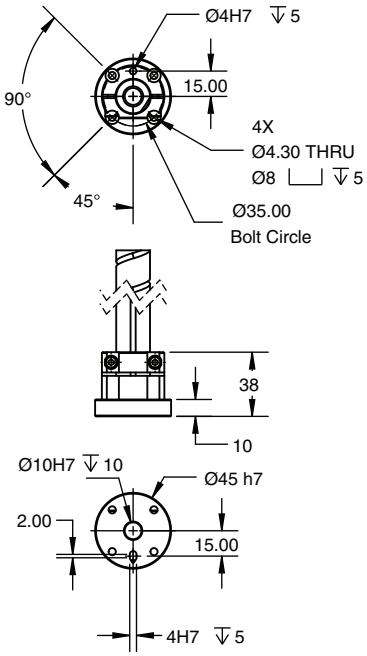

Footprint

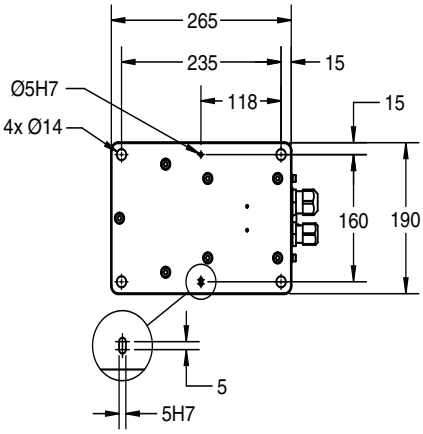

Front panel (option)

Robot Parts Code and Bundled Accessories

Type	Cobra 450	Cobra 450 Add-On
Cobra 450	17201-14500	17203-14500
Overview	Robot + Integral Power and Signal Cables + eMotionBlox-40M amplifier with fully-integrated controls	Robot + Integral Power and Signal Cables + eMotionBlox-40M amplifier + required connection cables
Purpose	Typical for use in single-robot system	Typically added to systems with an existing SmartController EX to create multi-robot systems
Bundled Cable/Accessories	• XSYSTEM cable with jumpers, 1.8 m/6 ft (13323-000)	• XSYSTEM cable with jumpers, 1.8 m/6 ft (13323-000) • XSYS cable, 4.5 m/15 ft (11585-000) • DB9 splitter (00411-000) • 1394 latch cable, 4.5 m/15 ft (13632-045) • eV+ license to connect to controller (14529-103)

DOWNLOADED FROM SCATTS.CO.UK

Cobra 500

Mid-size SCARA robot for material handling, assembly, precision machining and adhesive application

- Programmable through ACE software and eV+ language, or through the familiar IEC 61131-3 when using ePLC Connect.
- Good repeatability for precision assembly
- High Payload for using tools for screw-driving and adhesive application
- Minimum footprint with separate controller
- Robot with integral power and signal cables
- Reach 500 mm
- Maximum Payload 5 kg
- Weight 29 kg

Specifications

Product name		Cobra
	Size	500
Part Number		1720[ ]-15000
Number of axes		4
Mounting		table/floor
Reach		500 mm
Maximum Payload		5 kg
Repeatability	XY	±0.02 mm
	Z	±0.01 mm
	Theta	±0.005°
Joint Range	Joint 1	±125°
	Joint 2	±145°
	Joint 3	200 mm
	Joint 4	±360°
Inertia Moment (Max.)	Joint 4	450 kg-cm^2
Joint Speeds	Joint 1	450°/s
	Joint 2	720°/s
	Joint 3	1120 mm/s
	Joint 4	1940°/s
Cycle times, *1 with 2.0 kg Payload	Burst	0.51 s
	Sustained	0.60 s
Power Requirements		24 VDC: 6 A 200 to 240 VAC: 10 A, single-phase
Protection		IP20
Clean Class		---
Environment Requirements	Ambient Temperature	5 to 40°C
	Humidity Range	35 to 90% (non-condensing)
Weight		29 kg
Basic configuration	Controller	eMotionBlox-40
	On-board I/O (Input/Output)	12/8
	Conveyor tracking input	2
	RS-232C serial communications port	1
	Programming environment	ACE, PackXpert, ePLC
	ACE Sight	Yes
	ePLC Connect	Yes
	ePLC I/O	Yes
Connectable controller *2		eMotionBlox-40M, SmartController EX, NJ/NX/NY Series

*1. Adept cycle, in mm 25/305/25 (seconds, at 20°C ambient)
*2. Choose a controller to suit your application.

DOWNLOADED FROM SCATTS.CO.UK

DOWNLOADED FROM SCATTS.CO.UK

Dimensions

(Unit: mm)

Cobra 500

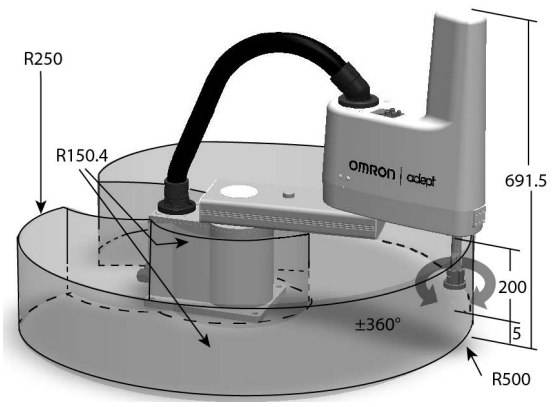

eMotionBlox-40M

Weight : 9.3 kg

Flange

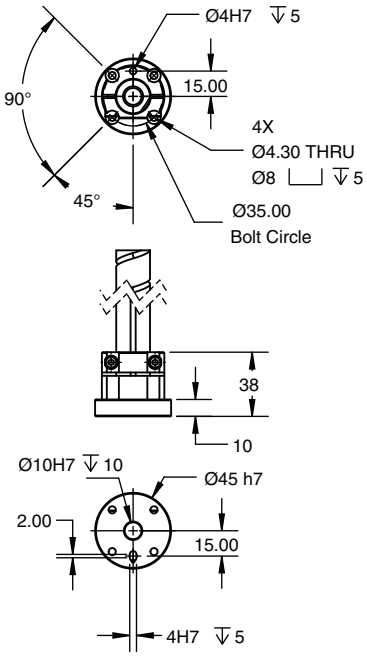

Footprint

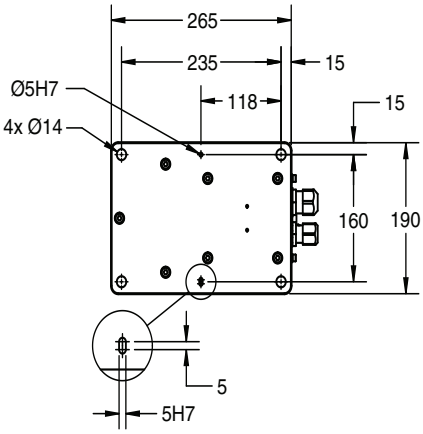

Front panel (option)

Robot Parts Code and Bundled Accessories

Type	Cobra 500	Cobra 500 Add-On
Cobra 500	17201-15000	17203-15000
Overview	Robot + Integral Power and Signal Cables + eMotionBlox-40M amplifier with fully-integrated controls	Robot + Integral Power and Signal Cables + eMotionBlox-40M amplifier + required connection cables
Purpose	Typical for use in single-robot system	Typically added to systems with an existing SmartController EX to create multi-robot systems
Bundled Cable/Accessories	• XSYSTEM cable with jumpers, 1.8 m/6 ft (13323-000)	• XSYSTEM cable with jumpers, 1.8 m/6 ft (13323-000) • XSYS cable, 4.5 m/15 ft (11585-000) • DB9 splitter (00411-000) • 1394 latch cable, 4.5 m/15 ft (13632-045) • eV+ license to connect to controller (14529-103)

DOWNLOADED FROM SCATTS.CO.UK

Cobra 650

Mid-size SCARA robot for material handling, assembly, precision machining and adhesive application

- Programmable through ACE software and eV+ language, or through the familiar IEC 61131-3 when using ePLC Connect
- Good repeatability for precision assembly
- High Payload for using tools for screw-driving and adhesive application
- Minimum footprint with separate controller
- Robot with integral power and signal cables
- Reach 650 mm
- Maximum Payload 5 kg
- Weight 31 kg

Specifications

Product name		Cobra
	Size	650
Part Number		1720[ ]-16500
Number of axes		4
Mounting		table/floor
Reach		650 mm
Maximum Payload		5 kg
Repeatability	XY	±0.02 mm
	Z	±0.01 mm
	Theta	±0.005°
Joint Range	Joint 1	±125°
	Joint 2	±145°
	Joint 3	200 mm
	Joint 4	±360°
Inertia Moment (Max.)	Joint 4	450 kg-cm^2
Joint Speeds	Joint 1	450°/s
	Joint 2	720°/s
	Joint 3	1120 mm/s
	Joint 4	1940°/s
Cycle times, *1 with 2.0 kg Payload	Burst	0.43 s
	Sustained	0.60 s
Power Requirements		24 VDC: 6 A 200 to 240 VAC: 10 A, single-phase
Protection		IP20
Clean Class		---
Environment Requirements	Ambient Temperature	5 to 40°C
	Humidity Range	35 to 90% (non-condensing)
Weight		31 kg
Basic configuration	Controller	eMotionBlox-40
	On-board I/O (Input/Output)	12/8
	Conveyor tracking input	2
	RS-232C serial communications port	1
	Programming environment	ACE, ePLC
	ACE Sight	Yes
	ePLC Connect	Yes
	ePLC I/O	Yes
Connectable controller *2		eMotionBlox-40M, SmartController EX, NJ/NX/NY Series

*1. Adept cycle, in mm 25/305/25 (seconds, at 20°C ambient)
*2. Choose a controller to suit your application.

DOWNLOADED FROM SCATTS.CO.UK

DOWNLOADED FROM SCATTS.CO.UK

Dimensions

(Unit: mm)

Cobra 650

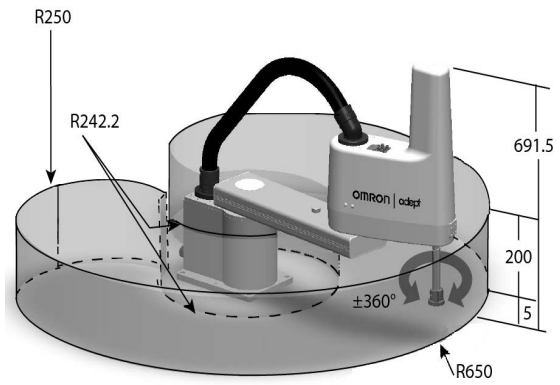

eMotionBlox-40M

Weight : 9.3 kg

Flange

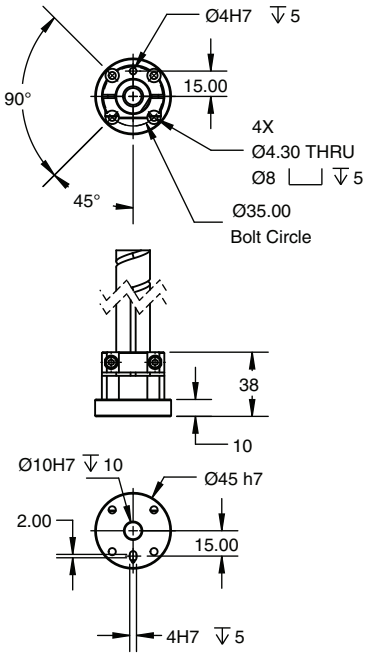

Footprint

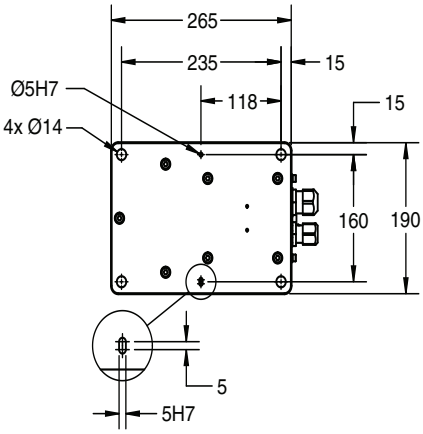

Front panel (option)

Robot Parts Code and Bundled Accessories

Type	Cobra 650	Cobra 650 Add-On
Cobra 650	17201-16500	17203-16500
Overview	Robot + Integral Power and Signal Cables + eMotionBlox-40M amplifier with fully-integrated controls	Robot + Integral Power and Signal Cables + eMotionBlox-40M amplifier + required connection cables
Purpose	Typical for use in single-robot system	Typically added to systems with an existing SmartController EX to create multi-robot systems
Bundled Cable/Accessories	• XSYSTEM cable with jumpers, 1.8 m/6 ft (13323-000)	• XSYSTEM cable with jumpers, 1.8 m/6 ft (13323-000) • XSYS cable, 4.5 m/15 ft (11585-000) • DB9 splitter (00411-000) • 1394 latch cable, 4.5 m/15 ft (13632-045) • eV+ license to connect to controller (14529-103)

DOWNLOADED FROM SCATTS.CO.UK

eCobra 600 Lite/Standard/Pro

Mid-size SCARA robot for precision machining, assembly, and material handling

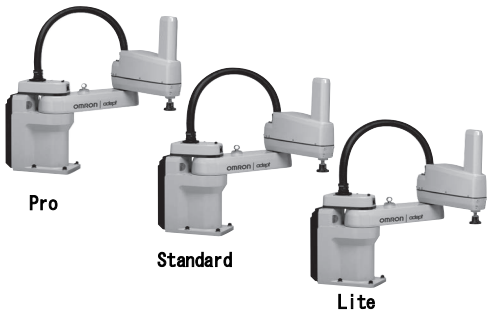

- Ethernet capability to control the robot through the familiar programming language (IEC 61131-3) of Machine Automation Controller NJ/NX/NY Series
- High repeatability suitable for material handling and precision assembly
- High payload for screw-driving tools
- Amplifier and controller built into the robot reduces the number of cables
- Choose the right robot for you application from three different types
- Reach 600 mm
- Maximum payload 5.5 kg
- Weight 41 kg

Specifications

Product name		eCobra					
	Size	600					
	Type	600 Lite		600 Standard		600 Pro	
	Cleanroom	Standard	Cleanroom	Standard	Cleanroom	Standard	Cleanroom
Part Number		17010-16000	17010-16010	1711[ ]-16000	1711[ ]-16010	1721[ ]-16000	1721[ ]-16010
Number of axes		4					
Mounting		table/floor					
Reach		600 mm					
Maximum Payload		5.5 kg					
Repeatability	XY	±0.017 mm					
	Z	±0.003 mm					
	Theta	±0.019°					
Joint Range	Joint 1	±105°					
	Joint 2	±157.5°					
	Joint 3	210 mm					
	Joint 4	±360°					
Inertia Moment (Max.)	Joint 4	450 kg-cm^2					
Joint Speeds	Joint 1	386°/s					
	Joint 2	720°/s					
	Joint 3	1100 mm/s					
	Joint 4	1200°/s					
Cycle times *1 (Payload 2.0 kg)	Burst	0.66 s		0.55 s		0.39 s	
	Sustained	0.66 s		0.55 s		0.45 s	
Power Requirements		24 VDC: 6 A 200 to 240 VAC: 10 A, single-phase					
Protection		IP20					
Clean Class		---	Class 10	---	Class 10	---	Class 10
Environment Requirements	Ambient Temperature	5 to 40°C					
	Humidity Range	5 to 90% (non-condensing)					
Weight		41 kg					
Basic configuration	Controller	eAIB					
	On-board I/O (Input/Output)	12/8, 4 Solenoid Output					
	Conveyor tracking input	No				2	
	RS-232C serial communications port	No		1			
	Programming environment	ACE		ACE, PackXpert, ePLC			
	ACE Sight	No *2		Yes			
	ePLC Connect	No		Yes			
	ePLC I/O	No				Yes	
Connectable controller *3		No		SmartController EX, NJ/NX/NY Series *4			

*1. Adept cycle, in mm 25/305/25 (seconds, at 20°C ambient)
*2. The SmartVision MX cannot be used with the Lite type.
*3. Choose a controller to suit your application.
*4. The robot version 2.3.C or later is required to connect with the NJ/NX/NY Series.

DOWNLOADED FROM SCATTS.CO.UK

DOWNLOADED FROM SCATTS.CO.UK

Dimensions

(Unit: mm)

eCobra 600

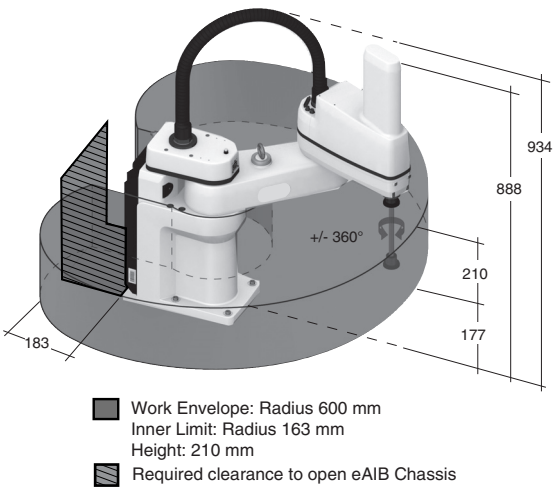

Flange

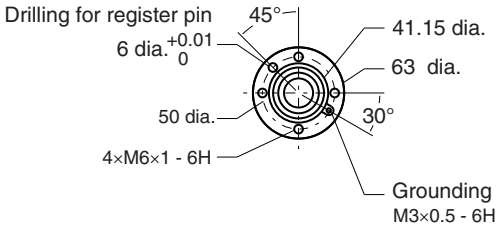

Footprint

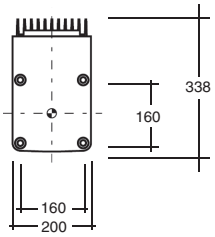

Front panel

Robot Parts Code and Bundled Accessories

Type	eCobra		eCobra Add-On	
Cleanroom	**Standard**	**Cleanroom**	**Standard**	**Cleanroom**
eCobra 600 Lite	17010-16000	17010-16010	---	---
eCobra 600 Standard	17111-16000	17111-16010	17113-16000	17113-16010
eCobra 600 Pro	17211-16000	17211-16010	17213-16000	17213-16010
Overview	Robot + eAIB with fully integrated controls		Robot + eAIB with required connection cables	
Purpose	Typical for use in single robot system		Typically added to systems with an existing SmartController EX to create multi-robot systems	
Bundled Accessories	• XSYSTEM cable with jumpers, 1.8 m/6 ft (13323-000) • Front panel kit (90356-10358)		• XSYSTEM cable with jumpers, 1.8 m/6 ft (13323-000) • XSYS cable, 4.5 m/15 ft (11585-000) • DB9 splitter (00411-000) • 1394 latch cable, 4.5 m/15 ft (13632-045) • eV+ license to connect to controller (14529-103)	

DOWNLOADED FROM SCATTS.CO.UK

eCobra 800 Lite/Standard/Pro

Large SCARA robot for precision machining, assembly, and material handling

- Ethernet capability to control the robot through the familiar programming language (IEC 61131-3) of Machine Automation Controller NJ/NX/NY Series
- Reach is extended to 800 mm without compromising repeatability
- High payload for screw-driving tools
- The amplifier and controller built into the robot reduces the number of cables
- Choose the right robot for you application from three different types
- Reach 800 mm
- Maximum payload 5.5 kg
- Weight 43 kg

Specifications

Product name		eCobra								
	Size	800								
	Type	800 Lite			800 Standard			800 Pro		
	Cleanroom/IP	Standard	Cleanroom	IP65	Standard	Cleanroom	IP65	Standard	Cleanroom	IP65
Part Number		17010-18000	17010-18010	17010-18030	1711[ ]-18000	1711[ ]-18010	1711[ ]-18030	1721[ ]-18000	1721[ ]-18010	1721[ ]-18030
Number of axes		4								
Mounting		table/floor								
Reach		800 mm								
Maximum Payload		5.5 kg								
Repeatability	XY	±0.017 mm								
	Z	±0.003 mm								
	Theta	±0.019°								
Joint Range	Joint 1	±105°								
	Joint 2	±157.5°								
	Joint 3	210 mm								
	Joint 4	±360°								
Inertia Moment (Max.)	Joint 4	450 kg-cm^2								
Joint Speeds	Joint 1	386°/s								
	Joint 2	720°/s								
	Joint 3	1100 mm/s								
	Joint 4	1200°/s								
Cycle times (Payload 2.0 kg)	Burst *1	0.73 s			0.62 s			0.44 s		
	Sustained *1	0.73 s			0.62 s			0.54 s		
Power Requirements		24 VDC: 6 A 200 to 240 VAC: 10 A, single-phase								
Protection		IP20	IP20	IP65	IP20	IP20	IP65	IP20	IP20	IP65
Clean Class		---	Class 10	---	---	Class 10	---	---	Class 10	---
Environment Requirements	Ambient Temperature	5 to 40°C								
	Humidity Range	5 to 90% (non-condensing)								
Weight		43 kg								
Basic configuration	Controller	eAIB								
	On-board I/O (Input/Output)	12/8, 4 Solenoid Output								
	Conveyor tracking input	No						2		
	RS-232C serial communications port	No			1					
	Programming environment	ACE			ACE, PackXpert, ePLC					
	ACE Sight	No *2			Yes					
	ePLC Connect	No			Yes					
	ePLC I/O	No						Yes		
Connectable controller *3		No			SmartController EX, NJ/NX/NY Series *4					

*1. Adept cycle, in mm 25/305/25 (seconds, at 20°C ambient)
*2. The SmartVision MX cannot be used with the Lite type.
*3. Choose a controller to suit your application.
*4. The robot version 2.3.C or later is required to connect with the NJ/NX/NY Series.

DOWNLOADED FROM SCATTS.CO.UK

DOWNLOADED FROM SCATTS.CO.UK

Dimensions

(Unit: mm)

eCobra 800

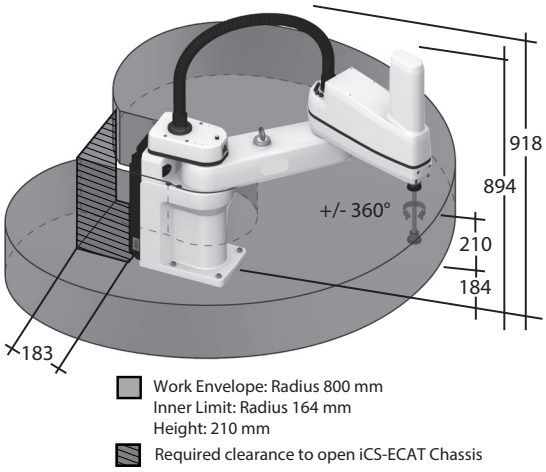

Flange

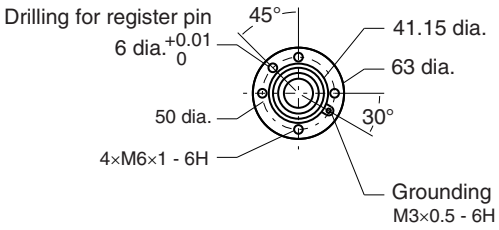

Footprint

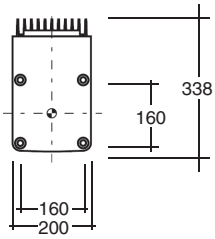

Front panel

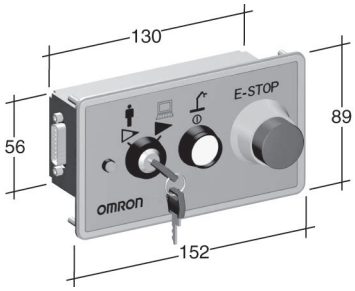

Robot Parts Code and Bundled Accessories

Type	eCobra			eCobra Add-On		
Cleanroom/IP	**Standard**	**Cleanroom**	**IP65**	**Standard**	**Cleanroom**	**IP65**
eCobra 800 Lite	17010-18000	17010-18010	17010-18030	---	---	---
eCobra 800 Standard	17111-18000	17111-18010	17111-18030	17113-18000	17113-18010	17113-18030
eCobra 800 Pro	17211-18000	17211-18010	17211-18030	17213-18000	17213-18010	17213-18030
Overview	Robot + eAIB with fully integrated controls			Robot + eAIB with required connection cables		
Purpose	Typical for use in single robot system			Typically added to systems with an existing SmartController EX to create multi-robot systems		
Bundled Accessories	• XSYSTEM cable with jumpers, 1.8 m/6 ft (13323-000) • Front panel kit (90356-10358)		• XSYSTEM cable with jumpers, 1.8 m/6 ft (13323-000) • Front panel kit (90356-10358) • Cable Seal Kit (04813-000)	• XSYSTEM cable with jumpers, 1.8 m/6 ft (13323-000) • XSYS cable, 4.5 m/15 ft (11585-000) • DB9 splitter (00411-000) • 1394 latch cable, 4.5 m/15 ft (13632-045) • eV+ license to connect to controller (14529-103)		• XSYSTEM cable with jumpers, 1.8 m/6 ft (13323-000) • XSYS cable, 4.5 m/15 ft (11585-000) • DB9 splitter (00411-000) • 1394 latch cable, 4.5 m/15 ft (13632-045) • eV+ license to connect to controller (14529-103) • Cable Seal Kit (04813-000)

DOWNLOADED FROM SCATTS.CO.UK

eCobra 800 Inverted Lite/Standard/Pro

Overhead-mount large SCARA robot for precision machining, assembly, and material handling

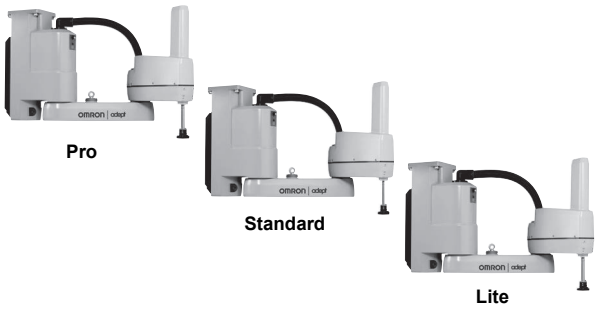

- Ethernet capability to control the robot through the familiar programming language (IEC 61131-3) of Machine Automation Controller NJ/NX/NY Series
- Overhead-mounting configuration for efficient use of space
- High payload for screw-driving tools
- The amplifier and controller built into the robot reduces the number of cables
- Choose the right robot for you application from three different types
- Reach 800 mm
- Maximum payload 5.5 kg
- Weight 51 kg

Specifications

Product name		eCobra Inverted								
	Size	800								
	Type	800 Lite			800 Standard			800 Pro		
	Cleanroom/IP	Standard	Cleanroom	IP65	Standard	Cleanroom	IP65	Standard	Cleanroom	IP65
Part Number		17010-18400	17010-18410	17010-18430	1711[ ]-18400	1711[ ]-18410	1711[ ]-18430	1721[ ]-18400	1721[ ]-18410	1721[ ]-18430
Number of axes		4								
Mounting		inverted								
Reach		800 mm								
Maximum Payload		5.5 kg								
Repeatability	XY	±0.017 mm								
	Z	±0.003 mm								
	Theta	±0.019°								
Joint Range	Joint 1	±123.5°								
	Joint 2	±156.5°								
	Joint 3	210 mm								
	Joint 4	±360°								
Inertia Moment (Max.)	Joint 4	450 kg-cm^2								
Joint Speeds	Joint 1	386°/s								
	Joint 2	720°/s								
	Joint 3	1100 mm/s								
	Joint 4	1200°/s								
Power Requirements		24 VDC: 6 A 230 VAC: 10 A								
Protection		IP20	IP20	IP65	IP20	IP20	IP65	IP20	IP20	IP65
Clean Class		---	Class 10	---	---	Class 10	---	---	Class 10	---
Environment Requirements	Ambient Temperature	5 to 40°C								
	Humidity Range	5 to 90% (non-condensing)								
Weight		51 kg								
Basic configuration	Controller	eAIB								
	On-board I/O (Input/Output)	12/8, 4 Solenoid Output								
	Conveyor tracking input	No						2		
	RS-232C serial communications port	No			1					
	Programming environment	ACE			ACE, PackXpert, ePLC					
	ACE Sight	No *1			Yes					
	ePLC Connect	No			Yes					
	ePLC I/O	No						Yes		
Connectable controller *2		No			SmartController EX, NJ/NX/NY Series *3					

*1. The SmartVision MX cannot be used with the Lite type.
*2. Choose a controller to suit your application.
*3. The robot version 2.3.C or later is required to connect with the NJ/NX/NY Series.

DOWNLOADED FROM SCATTS.CO.UK

DOWNLOADED FROM SCATTS.CO.UK

Dimensions

(Unit: mm)

eCobra Inverted 800

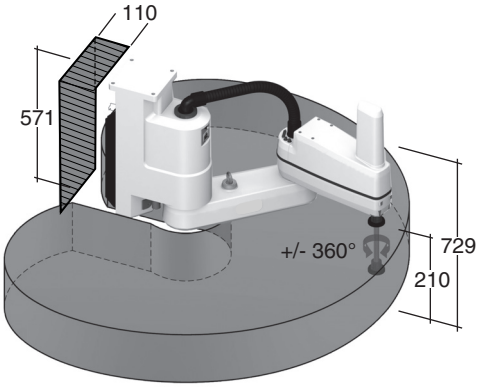

Work Envelope: Radius 800 mm
Inner Limit: Radius 167 mm
Height: 210 mm

Required clearance to open eAIB Chassis

Flange

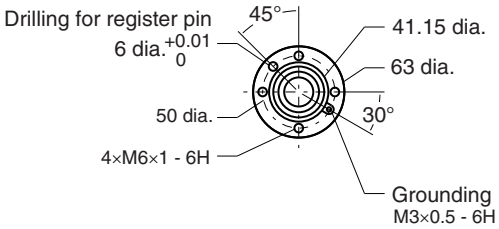

Footprint

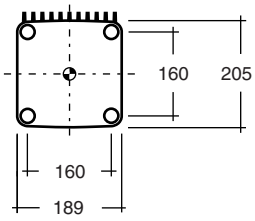

Front panel

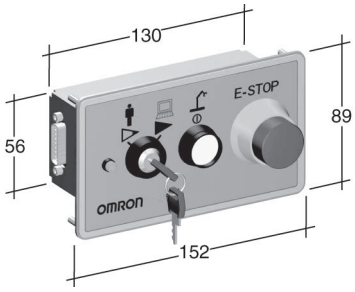

Robot Parts Code and Bundled Accessories

Type	eCobra			eCobra Add-On		
Cleanroom/IP	**Standard**	**Cleanroom**	**IP65**	**Standard**	**Cleanroom**	**IP65**
eCobra 800 Inverted Lite	17010-18400	17010-18410	17010-18430	---	---	---
eCobra 800 Inverted Standard	17111-18400	17111-18410	17111-18430	17113-18400	17113-18410	17113-18430
eCobra 800 Inverted Pro	17211-18400	17211-18410	17211-18430	17213-18400	17213-18410	17213-18430
Overview	Robot + eAIB with fully integrated controls			Robot + eAIB with required connection cables		
Purpose	Typical for use in single robot system			Typically added to systems with an existing SmartController EX to create multi-robot systems		
Bundled Accessories	• XSYSTEM cable with jumpers, 1.8 m/6 ft (13323-000) • Front panel kit (90356-10358)		• XSYSTEM cable with jumpers, 1.8 m/6 ft (13323-000) • Front panel kit (90356-10358) • Cable Seal Kit (09073-000)	• XSYSTEM cable with jumpers, 1.8 m/6 ft (13323-000) • XSYS cable, 4.5 m/15 ft (11585-000) • DB9 splitter (00411-000) • 1394 latch cable, 4.5 m/15 ft (13632-045) • eV+ license to connect to controller (14529-103)		

DOWNLOADED FROM SCATTS.CO.UK

Viper 650

Articulated robot for machining, assembly, and material handling

- Programmable through ACE software and eV+ language, or through the familiar IEC 61131-3 when using ePLC Connect.
- Diagnostics display enables faster trouble shooting
- High-resolution, absolute encoders to provide high accuracy, superior slow-speed following, and easy calibration
- High-efficiency, low-inertia Harmonic Drives and a lightweight arm to deliver maximum acceleration
- Reach 653 mm
- Maximum payload 5 kg
- Weight 34 kg

Specifications

Product name		Viper		
	Size	650		
	Cleanroom/IP	Standard	Cleanroom	IP54/65
Part Number		1720[ ]-36000	1720[ ]-36020	1720[ ]-36010
Mounting		Table/Floor/Inverted		
Number of axes		6		
Reach		653 mm		
Maximum Payload		5 kg		
Repeatability	XYZ	±0.02 mm		
Joint Range	Joint 1	±170°		
	Joint 2	-190°, +45°		
	Joint 3	-29°, +256°		
	Joint 4	±190°		
	Joint 5	±120°		
	Joint 6	±360°		
Inertia Moment (Max.)	Joint 4	0.295 kgm^2		
	Joint 5	0.295 kgm^2		
	Joint 6	0.045 kgm^2		
Joint Speeds	Joint 1	328°/s		
	Joint 2	300°/s		
	Joint 3	375°/s		
	Joint 4	375°/s		
	Joint 5	375°/s		
	Joint 6	600°/s		

Product name		Viper		
	Size	650		
	Cleanroom/IP	Standard	Cleanroom	IP54/65
Power Requirements		24 VDC: 6 A 200 to 240 VAC: 10 A, single-phase		
Protection	Base	IP40	IP40	IP54
	Robot Joints (J4, J5, J6)	IP40	IP40	IP65
Clean Class		---	Class10	---
Environment Requirements	Ambient Temperature	5 to 40°C		
	Humidity Range	5 to 90% (non-condensing)		
Weight		34 kg		
cULus Compliant		(Yes) *1		
Basic configuration	Controller	eMotionBlox-60R		
	On-board I/O (Input/Output)	12/8		
	Conveyor tracking input	2		
	RS-232C serial communications port	1		
	Programming environment	ACE, ePLC		
	ACE Sight	Yes		
	ePLC Connect	Yes		
	ePLC I/O	Yes		
Connectable controller *2		eMotionBlox-60R, SmartController EX, NJ/NX/NY Series *3		

*1. cULus option
*2. Choose a controller to suit your application.
*3. The robot version 2.3.C or later is required to connect with the NJ/NX/NY Series.

DOWNLOADED FROM SCATTS.CO.UK

DOWNLOADED FROM SCATTS.CO.UK

Dimensions

(Unit: mm)

Viper 650

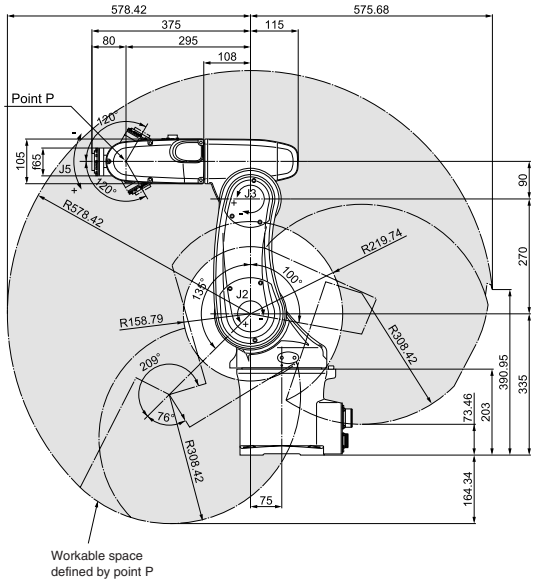

eMotionBlox-60R

Weight : 9.3 kg

Front panel

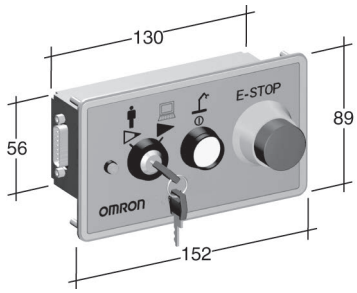

Footprint

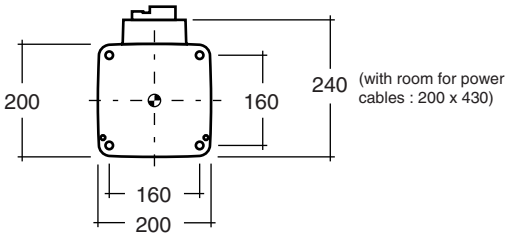

Flange

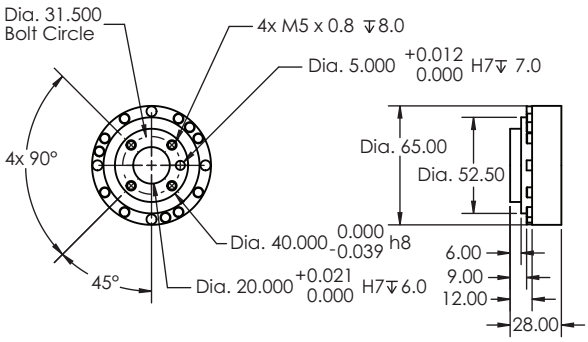

Robot Parts Code and Bundled Accessories

Type	Viper			Viper Add-On		
Cleanroom/IP	**Standard**	**Cleanroom**	**IP54/65**	**Standard**	**Cleanroom**	**IP54/65**
Viper 650	17201-36000	17201-36020	17201-36010	17203-36000	17203-36020	17203-36010
Overview	Robot + eMotionBlox-60R amplifier with fully integrated controls			Robot + eMotionBlox-60R + required connection cables		
Purpose	Typical for use in single robot system			Typically added to systems with an existing SmartController EX to create multi-robot systems		
Bundled Accessories	• XSYSTEM cable with jumpers, 1.8 m/6 ft (13323-000) • Front panel kit (90356-10358) • Arm power/signal cable, 4 m/13 ft - Standard Model: 05020-000) - Cleanroom & IP54/65 Models: 05463-000			• XSYSTEM cable with jumpers, 1.8 m/6 ft (13323-000) • XSYS cable, 4.5 m/15 ft (11585-000) • DB9 splitter (00411-000) • 1394 latch cable, 4.5 m/15 ft (13632-045) • eV+ license to connect to controller (14529-103)		

DOWNLOADED FROM SCATTS.CO.UK

Viper 850

Articulated robot for machining, assembly, and material handling

- Programmable through ACE software and eV+ language, or through the familiar IEC 61131-3 when using ePLC Connect.
- Diagnostics display enables faster trouble shooting
- High-resolution, absolute encoders to provide high accuracy, superior slow-speed following, and easy calibration
- High-efficiency, low-inertia Harmonic Drives and a lightweight arm to deliver maximum acceleration
- Reach 855 mm
- Maximum payload 5 kg
- Weight 36 kg

Specifications

Product name		Viper		
	Size	850		
	Cleanroom/IP	Standard	Cleanroom	IP54/65
Part Number		1720[ ]-38000	1720[ ]-38020	1720[ ]-38010
Mounting		Table/Floor/Inverted		
Number of axes		6		
Reach		855 mm		
Maximum Payload		5 kg		
Repeatability	XYZ	±0.03 mm		
Joint Range	Joint 1	±170°		
	Joint 2	-190°, +45°		
	Joint 3	-29°, +256°		
	Joint 4	±190°		
	Joint 5	±120°		
	Joint 6	±360°		
Inertia Moment (Max.)	Joint 4	0.295 kgm^2		
	Joint 5	0.295 kgm^2		
	Joint 6	0.045 kgm^2		
Joint Speeds	Joint 1	250°/s		
	Joint 2	250°/s		
	Joint 3	250°/s		
	Joint 4	375°/s		
	Joint 5	375°/s		
	Joint 6	600°/s		

Product name		Viper		
	Size	850		
	Cleanroom/IP	Standard	Cleanroom	IP54/65
Power Requirements		24 VDC: 6 A 200 to 240 VAC: 10 A, single-phase		
Protection	Base	IP40	IP40	IP54
	Robot Joints (J4, J5, J6)	IP40	IP40	IP65
Clean Class		---	Class10	---
Environment Requirements	Ambient Temperature	5 to 40°C		
	Humidity Range	5 to 90% (non-condensing)		
Weight		36 kg		
cULus Compliant		---		
Basic configuration	Controller	eMotionBlox-60R		
	On-board I/O (Input/Output)	12/8		
	Conveyor tracking input	2		
	RS-232C serial communications port	1		
	Programming environment	ACE, ePLC		
	ACE Sight	Yes		
	ePLC Connect	Yes		
	ePLC I/O	Yes		
Connectable controller *1		eMotionBlox-60R, SmartController EX, NJ/NX/NY Series *2		

*1. Choose a controller to suit your application.
*2. The robot version 2.3.C or later is required to connect with the NJ/NX/NY Series.

DOWNLOADED FROM SCATTS.CO.UK

DOWNLOADED FROM SCATTS.CO.UK

Dimensions

(Unit: mm)

Viper 850

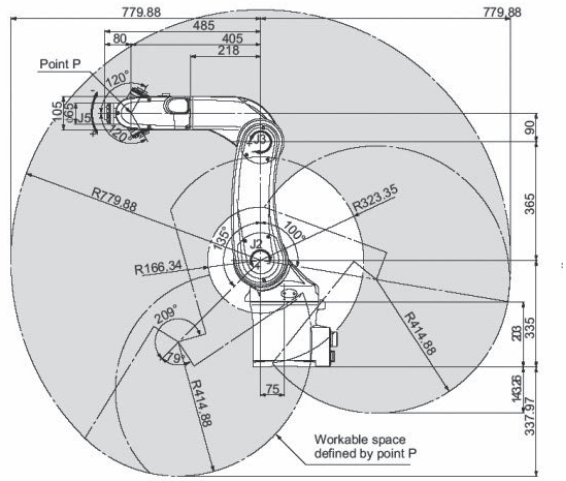

eMotionBlox-60R

Weight : 9.3 kg

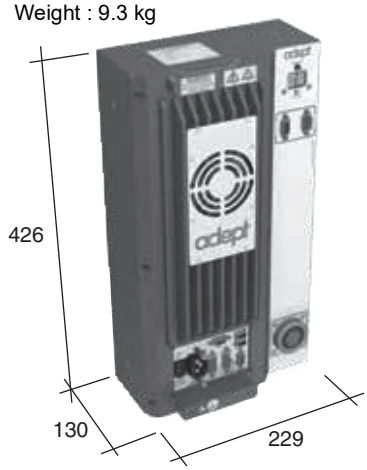

Front panel

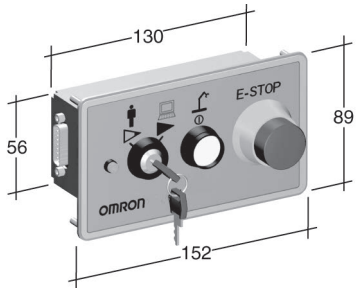

Footprint

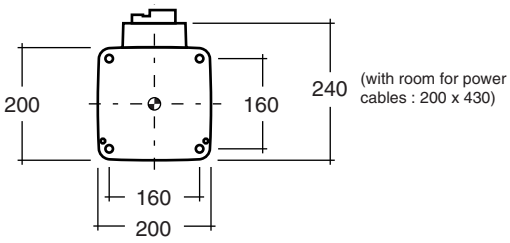

Flange

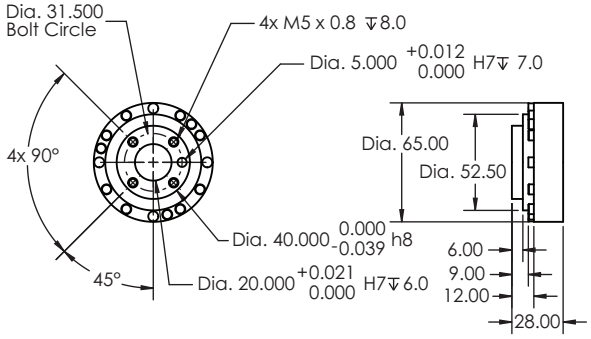

Robot Parts Code and Bundled Accessories

Type	Viper			Viper Add-On		
Cleanroom/IP	**Standard**	**Cleanroom**	**IP54/65**	**Standard**	**Cleanroom**	**IP54/65**
Viper 850	17201-38000	17201-38020	17201-38010	17203-38000	17203-38020	17203-38010
Overview	Robot + eMotionBlox-60R amplifier with fully integrated controls			Robot + eMotionBlox-60R + required connection cables		
Purpose	Typical for use in single robot system			Typically added to systems with an existing SmartController EX to create multi-robot systems		
Bundled Accessories	• XSYSTEM cable with jumpers, 1.8 m/6 ft (13323-000) • Front panel kit (90356-10358) • Arm power/signal cable, 4 m/13 ft - Standard Model: 05020-000) - Cleanroom & IP54/65 Models: 05463-000			• XSYSTEM cable with jumpers, 1.8 m/6 ft (13323-000) • XSYS cable, 4.5 m/15 ft (11585-000) • DB9 splitter (00411-000) • 1394 latch cable, 4.5 m/15 ft (13632-045) • eV+ license to connect to controller (14529-103)		

DOWNLOADED FROM SCATTS.CO.UK

SmartController EX

High-performance robot motion controller capable of high-speed processing

- Controls up to four robots
- Gigabit Ethernet
- 12 inputs/8 outputs
- Ultra-compact form factor for high footprint efficiency
- Integration with configuration software ACE to control complex mechanisms through user-friendly interface

Specifications

Item		Specifications
Part Number		19300-000
Grounding Method		Ground to less than 10 Ω
Dimensions (Height × Depth × Width)		86 × 187 × 329 mm
Weight		2.6 kg
Power Supply		24 VDC±10%
Current Consumption		5 A
Power Consumption		120 W
Operation Environment	Ambient Temperature	5 to 40°C
	Humidity Range	5 to 90% (non-condensing)
Mounting		Panel mount, rack mount, stack mount, desktop
Communications Port		RS-232 (115 kbps), RS422/485, Gigabit Ethernet, DeviceNet
On-board I/O (Input/Output)		12/8
Conveyor tracking input		4

Dimensions

(Unit: mm)

SmartController EX

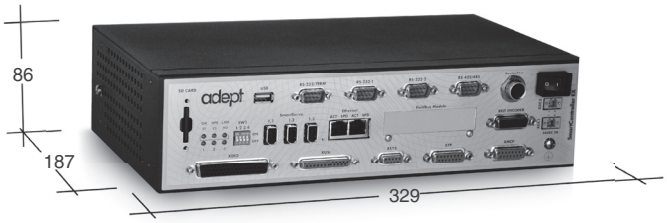

Front panel

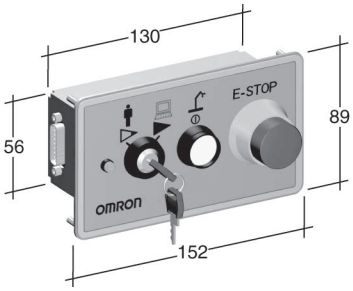

Note: Front Panel is provided with the SmartControllerEX.

DOWNLOADED FROM SCATTS.CO.UK

DOWNLOADED FROM SCATTS.CO.UK

Additional I/O Options

Input Specifications

Item	Specifications
Part Number	90356-30200/-30100/-40100
Rated Output Current	700 mA/point
Maximum Output Current	2.5 A at 50°C ambient 3.7 mA at 25°C ambient
ON Delay Time	100 μs max.
OFF Delay Time	150 μs max.

Output Specifications

Item	Specifications
Part Number	90356-30200/-30100/-40100
ON Voltage	10 V min.
OFF Voltage	3 V max.
OFF Current	0.5 mA
Input Current	2.5 mA min. 7.5 mA max.
ON Delay Time	5 μs max.
OFF Delay Time	5 μs max.
Isolation Method	Photocoupler isolation
Current Consumption from I/O Power Supply	6 mA max. (at power supply voltage of 24 VDC)

DOWNLOADED FROM SCATTS.CO.UK

Automation Control Environment (ACE)

ACE is a PC-based software package that easily manages Omron's entire portfolio of robots, controls, vision, and feeding systems

ACE software provides an easy-to-use environment to program and deploy applications ranging from simple pick & place to multi-robot belt-tracking lines. It allows you to increase productivity while streamlining configuration setup. ACE 4.0 shifts to an even more intuitive interface and provides superior data visualization.

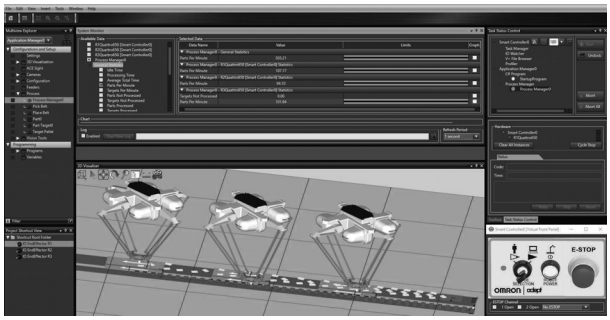

- Fast emulation and 3D visualization for quick proof of concept
- Wizard-based user-friendly interface to calibrate and teach the robots
- Recipe Manager simplifies management of manufacturing process and handles a range of product variations, ideal for flexible automation to reduce changeover time
- Robot Vision Manager enables vision guided conveyor-tracking and AnyFeeder integration via wizards
- Robot Vision Manager 4.0 also includes vision inspection tools to improve quality assurance and traceability

Application Manager

ACE provides another layer of simplification for Application development, by means of the Application Manager modules. These modules enable advanced programming capabilities for Packaging (PackManager) and Vision (Robot Vision Manager) applications.
PackManager can manage scalable packaging lines from integration to deployment and step-by-step guidance without scripting. The software walks you through the configuration of packaging applications by setting up process-specific items, such as controllers, robots, and conveyor belts.

Main Features:
•Process Manager optimizes the resources, decreasing idle time and maximizing the amount of parts processed per robot.
•Fully customizable for any line configuration and advanced load balancing.

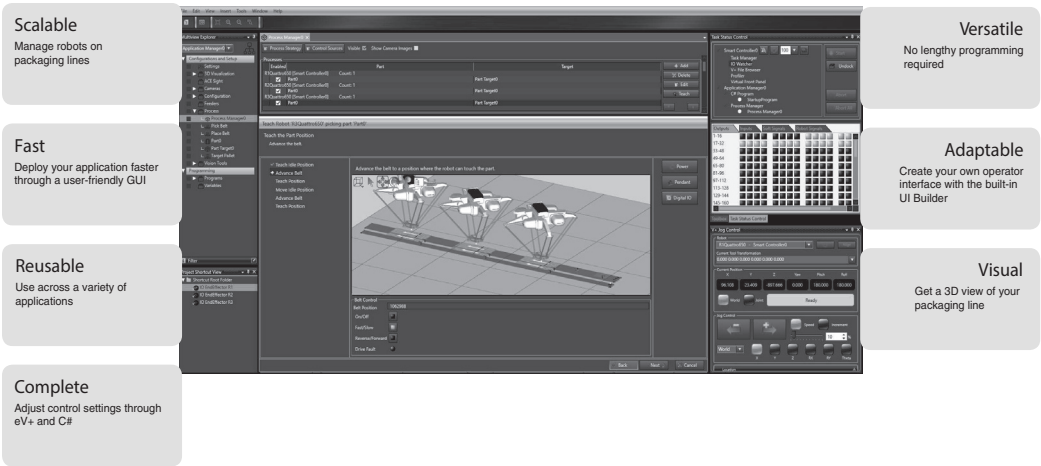

Note: When ACE PackManager is used to configure an application, robot cycle time may vary between the SmartController EX and eAIB/eMotionBox.

Robot Vision Manager provides algorithms and tools for easily integrated vision systems into robotic applications. Camera calibration, part identification, and image processing tools are supported as part of this manager.

Application Manager modules run as part of ACE and are executed on Omron's IPC Application Controller.

DOWNLOADED FROM SCATTS.CO.UK

DOWNLOADED FROM SCATTS.CO.UK

ACE License Configuration

License	Part Number	Explanation
ACE PackManager (for ACE 4.x)	20409-000	Enables full functionality of the ACE PackManager software.
Robot Vision Manager (for ACE 4.x)	20410-000	Enables the Robot Vision Manager functionality and inspection tools library.
Dual (PackManager plus Vision)	20433-000	Enables functionality of both PackManager and Robot Vision Manager

Note: When you create robot programs without using PackManager wizards and vision system, the ACE license is not required.

System Requirements

Item	Requirement
Operating system (OS)	Windows 7 (64-bit version) / Windows 10 (64-bit version)
CPU	Intel® Core™ i5 or equivalent or faster recommended.
Main memory	2 GB min. (8 GB recommended.)
Video memory	512 MB min.
Hard disk	At least 1 GB of available space
Display	XGA 1,024 × 768, 16 million colors. WXGA 1,280 × 800 min. recommended
Communications ports	USB port (for hardware key), Ethernet port
Supported languages	English, French, German, Japanese, Spanish, Italian, Korean, Simplified Chinese, Traditional Chinese

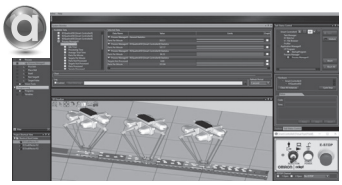

Automation Control Environment (ACE)

ACE is a PC-based software package that helps you quickly and easily set up your robot system.
ACE is available to download from the Omron website:
http://www.ia.omron.com/

DOWNLOADED FROM SCATTS.CO.UK

ePLC Robot Control Library

No need to learn a new robot programming language
Control robots directly from the NJ/NX/NY Controller

- The same instructions and programming method can be used to control any type of robot: parallel, SCARA, or articulated robot
- Robots can be controlled by using Function Blocks in Ladder or ST language
- Data on robots, controller, and other devices can be integrated and visualized
- Robots are connected to the NJ/NX/NJ Controller via EtherNet/IP. *

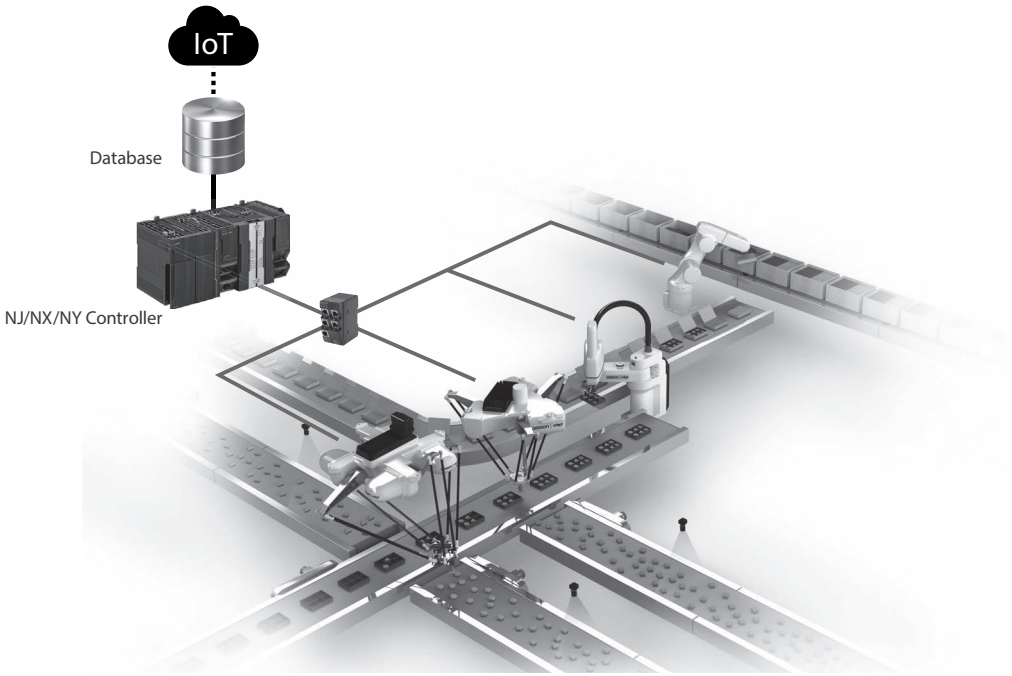

* The communication cycle time between the robot and NJ/NX/NY Controller depends on the robot controller. When the SmartController EX is used, the communications cycle time is 15 times faster than when the eAIB or eMotionBlox is used.

Function Block (FB) Specifications

Name	FB name	Description
Set Tool Trans	ARB_SetToolTransform	Sets a tool system transformation to the robot.
Reset Tool Transform	ARB_ResetToolTransform	Resets the robot tool which is set to the robot.
Define Location	ARB_DefineLocation	Defines a position in the robot.
Define Pallet	ARB_DefinePallet	Defines all pallet information in the robot.
Reset Error	ARB_ResetRobotError	Resets any existing error in the robot.
Robot Control	ARB_RobotControl	Controls the main robot settings and monitors the robot status.
Teach Position	ARB_TeachPosition	Teaches the current robot position and configuration.
Input Output Signals	ARB_InputOutputSignals	Communicates with the robot through its digital inputs and outputs.
Teach Pendant Control	ARB_TeachPendantControl	Sends and receives information from the manual control pendant attached to the robot.
Read Latch	ARB_ReadLatch	Outputs the current robot position when an external trigger is input.
Move	ARB_MoveCommand	Moves the robot to a target position using a linear interpolation or PTP operation.
Pick And Place	ARB_PickAndPlaceCommand	Moves the robot to a target position in a three-part motion.
Jog	ARB_Jog	Moves the specified joint or axis of the robot.
Align Tool Command	ARB_AlignToolCommand	Rotates the tool to be aligned with the world coordinate system.
Move Arc Command	ARB_MoveArcCommand	Moves the robot to the specified target position along arc trajectory.
Move Circular Command	ARB_MoveCircularCommand	Moves the robot along a circular trajectory, passing specified two positions.
Define Belt	ARB_DefineBelt	Defines a conveyor belt.
Belt Read Latch	ARB_BeltReadLatch	Outputs the belt encoder value of the conveyor when an external trigger is input.
Track Belt	ARB_TrackBelt	Enables tracking a workpiece.

DOWNLOADED FROM SCATTS.CO.UK

DOWNLOADED FROM SCATTS.CO.UK

Compatible Part Numbers

Name		Part Number	Version
Adept Robot Control Library		SYSMAC-XR009	---
Machine Automation Controller NJ/NX CPU Unit		NX701-[ ][ ][ ][ ]/NJ101-[ ][ ][ ][ ]	Version 1.10 or later
		NJ501-[ ][ ][ ][ ]/NJ301-[ ][ ][ ][ ]	Version 1.01 or later
		NX1P2-[ ][ ][ ][ ][ ][ ] (1)	Version 1.13 or later
Industrial PC Platform NY IPC Machine Controller		NY5[ ][ ]-1	Version 1.12 or later
Automation Software Sysmac Studio		SYSMAC-SE2[ ][ ][ ]	Version 1.15 or later
Parallel Robot	**Hornet 565**	1720[ ]-4560[ ]	Version 2.3.C or later
	Quattro 650H/HS, 800H/HS	1720[ ]-26[ ][ ][ ]	Version 2.3.C or later
SCARA Robot	**eCobra 600/800**	17[ ][ ][ ]-1[ ][ ]00	Version 2.3.C or later
	Cobra 450/500/650	1720[ ]-1[ ][ ]00	---
Articulated Robot	**Viper 650/850**	1720[ ]-36[ ]000	Version 2.3.C or later

Sysmac Library

The Sysmac Library is a collection of software functional components that can be used in programs for the NJ/NX/NY Controllers.
Please download it from following URL and install to Sysmac Studio Automation Software.
http://www.ia.omron.com/sysmac_library/
The Adept Robot Control Library allows you to control parallel, SCARA, and articulated robots manufactured by Omron Adept Technologies Inc. from the NJ/NX/NY Controllers by using the same instructions and programming methods.

DOWNLOADED FROM SCATTS.CO.UK

DOWNLOADED FROM SCATTS.CO.UK

Robot Accessories

DOWNLOADED FROM SCATTS.CO.UK

DOWNLOADED FROM SCATTS.CO.UK

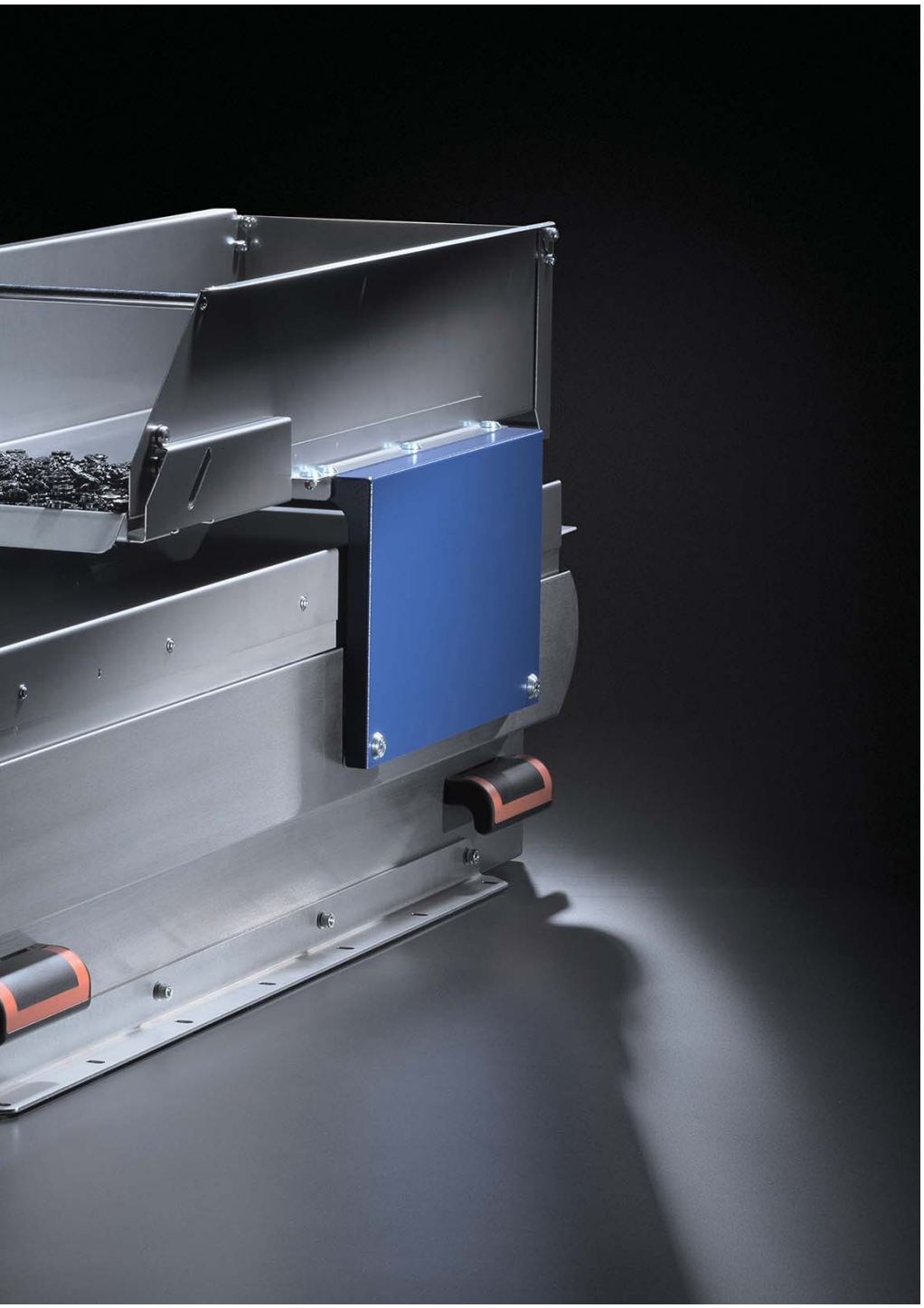

DOWNLOADED FROM SCATTS.CO.UK

IPC Application Controller

State-of-the-art industrial computer optimized for vision guided robotics applications

- Built-in vision processor with 128GB SSD, optimized to process high resolution, high frame rate images, with ACE 4.X
- System configuration by PC, include Sysmac Studio
- Appear feature about Robot Vision Manager, PackManager and Recipe Manager
- Unique simplified thermal design to maximize uptime
- GigE PoE and USB 3.0 ports for increased connectivity and fast data-transmission
- Supports up to 8 cameras simultaneously
- Compatible with Omron UPS S8BA Series
- Compact design to minimize panel space, allowing 2 mounting orientations

Specifications

Item		Specifications
Part Number		AC1-152000
Weight		3.8 kg
Grounding Method		Ground to less than 100 Ω
Dimensions (Height × Depth × Width)		89 × 200 × 282 mm
Main System	**CPU**	Intel® Core™ i5-7440EQ
	Main Memory	8 GB DDR4
	Trusted Platform Module	Available
	Graphics Controller	Intel® HD Graphics
	Watchdog	Yes
Operating System		Windows 10 Io T Enterprise LTSB - 64 bit
Storage Devices	**Hard Drive**	128 GB SSD Additional 3.5" hard drive slot available Additional SD memory card slot available, up to 32 GB capacity
Power Supply		20.4 to 28.8VDC
Power Consumption		97.6W (when using 2xUSB3.0 and 4xPOE Cameras)
Communications Port	**Power Connector**	24 VDC
	I/O Connector	2 inputs (UPS signal and power OFF control) and 1 output (Industrial Box PC power state)
	Ethernet Connector	Gigabit Ethernet x 3, Gigabit Ethernet with POE x 4 3W max power consumption per port
	USB	USB 3.0 x 4 (3m max cable length), USB 2.0 x 2 (5m max cable length)
	Display	DVI-Connector × 1 (up to 1,920 ×1,200 @60 Hz)
	RS-232C	Standard DSUB9 connector (Non-Isolated)
Battery	**Part Number**	CJ1W-BAT01
	Service Life	5 years at 25°C
Fan Unit	**Part Number**	NY000-AF00
	Service Life	70,000 hours of continuous operation at 40°C with 15% to 65% relative humidity
LED		PWR, ERR, HDD, RUN
Operation Environment	**Ambient Temperature**	0 to 55°C for operation, -20°C to 70°C for storage
	Humidity Range	10 to 90% (non-condensing)

DOWNLOADED FROM SCATTS.CO.UK

DOWNLOADED FROM SCATTS.CO.UK

Dimensions

(Unit: mm)

IPC Application Controller

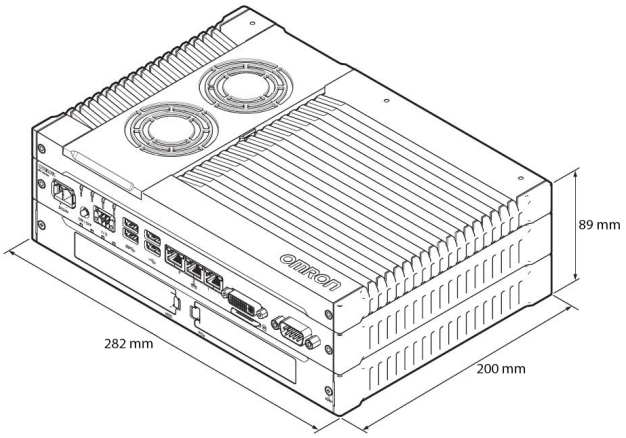

Dongle

Note: The dongle is bundled with the ACE License, which is not included in the IPC bundle. Insert the dongle into the USB port of the IPC Application Controller.

Bracket Dimensions

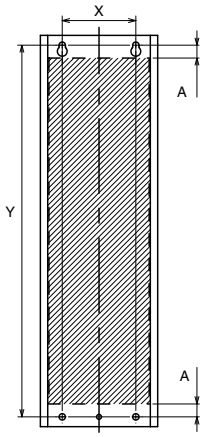

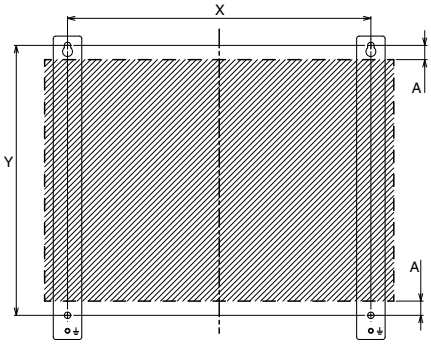

(Unit: mm)

Part Number	Bracket type	Drill Specifications			Product Dimensions	
		Hole Distance X	Hole Distance Y	Hole Distance A	Bracket Width	Bracket Height
NYB45-SPK	Book mount	60 mm	303 mm	11 mm	96 mm	319 mm
	Wall mount	245 mm	218 mm	12 mm	23 mm	245 mm

System Configuration

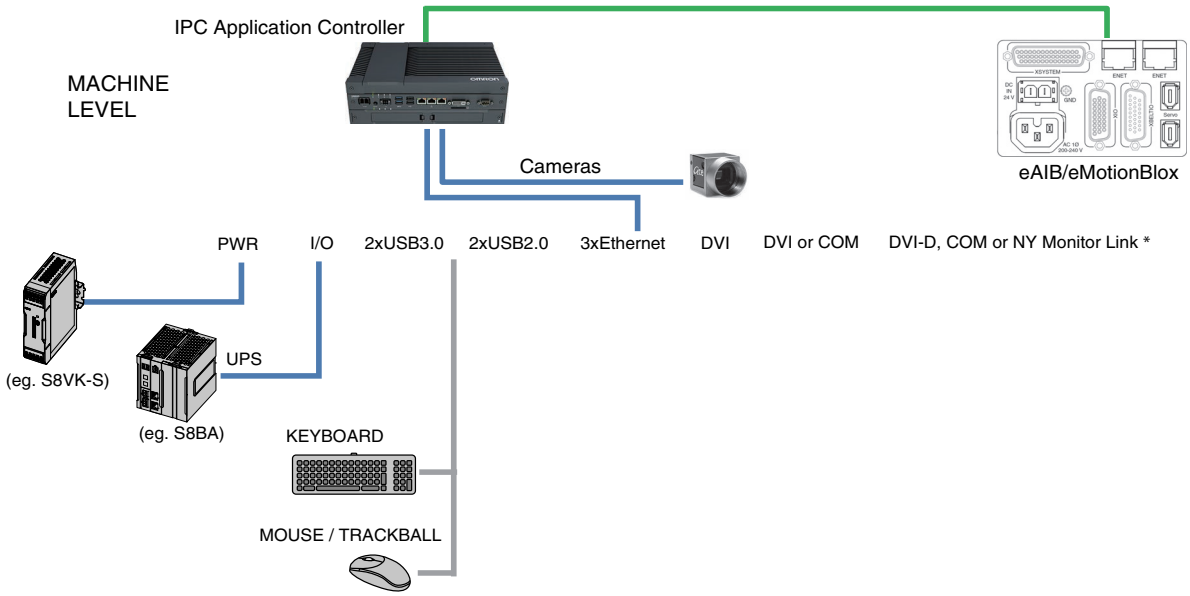

DOWNLOADED FROM SCATTS.CO.UK

DOWNLOADED FROM SCATTS.CO.UK

Accessories

Optional Hardware

Product name	Specifications	Part Number
Mounting Brackets	Book mount	NY000-AB00 NY000-AB04
	Wall mount	NY000-AB01
SD Memory Cards	Card type: SD Card Capacity: 2 GB Format: FAT16	HMC-SD291
	Card type: SDHC Card Capacity: 4 GB Format: FAT32	HMC-SD491
USB Flash Drives	Capacity: 2 GB	FZ-MEM2G
	Capacity: 8 GB	FZ-MEM8G
Storage Devices	Storage type: SSD, Capacity: 128 GB (same with default built in SSD)	NY000-AS04
USB Type-A to USB Type-B Cables	Cable length: 2 m USB 2.0 Minimum bend radius: 25 mm	FH-VUAB 2M
	Cable length: 5 m USB 2.0 Minimum bend radius: 25 mm	FH-VUAB 5M
DVI Cables	Cable length: 2 m Supports DVI-D Minimum bend radius: 36 mm	NY000-AC00 2M
	Cable length: 5 m Supports DVI-D Minimum bend radius: 36 mm	NY000-AC00 5M
Industrial Monitor	• LCD touchscreen • Multi-touch functionality • Supply voltage: 24 VDC • Up to 1,280 x 800 pixels at 60 Hz • 2 USB Type-A Connectors • Programmable brightness control • Standard and 100 m cable part numbers are available.	NYM1[ ] W-C10[ ] [ ]
Power Supply	• Output voltage: 24 VDC • Push-In Plus terminal blocks	S8VK-S[ ] [ ] [ ] 24
UPS	Output voltage during backup operation: 24 VDC ± 5%	S8BA with revision number 04 or higher*
UPS Communication Cable	Cable length: 2 m Signals for • Signal output (BL, TR, BU, WB) • Remote ON/OFF input • UPS Stop Signal input (BS)	S8BW-C02

*1. Revision number 04 or higher. The revision number of the UPS can be retrieved from the serial number label on the product and the product packaging.

Spare Parts

The following spare parts for the Industrial Box PC are available.

Product name	Specifications	Part Number
Battery	One battery is supplied with the Industrial Box PC. The battery supplies power to the real-time clock. The battery is located inside the Industrial Box PC. Service life: 5 years at 25°C	CJ1W-BAT01*
Fan Unit	The Fan Unit is available for the Industrial Box PC that has active cooling. Service life: 70,000 hours of continuous operation at 40°C with 15% to 65% relative humidity. Shelf life: 6 months This is the storage limitation with no power supplied.	NY000-AF00
Accessory Kit	Accessory Kit containing all accessories supplied with the Industrial Box PC. • Power connector • I/O connector • Drive bracket for drive installation • 4 mounting screws for drive installation • PCIe Card support for PCIe Card installation • PCIe Card clip for PCIe Card installation	NY000-AK00

*1. Only for part numbers with replaceable battery.

DOWNLOADED FROM SCATTS.CO.UK

DOWNLOADED FROM SCATTS.CO.UK

Electrical Specifications

Item			
Rated power supply voltage			24 VDC, non-isolated
Allowable power supply voltage range			20.4 to 28.8 VDC
Grounding method			Ground to less than 100 Ω
Inrush current			At 24 VDC: 12 A / 6 ms max. for cold start at room temperature
Overvoltage category			JIS B3502 and IEC 61131-2: Category II
EMC immunity level			IEC 61131-2: Zone B
RTC accuracy			At ambient temperature of 55°C: -3.5 to +0.5 min error per month At ambient temperature of 25°C: -1.5 to +1.5 min error per month At ambient temperature of 0°C: -3 to +1 min error per month
Power button life			100,000 operations
Battery life			5 years at 25°C (for battery CJ1W-BAT01)
Fan life			8 years of continuous operation at 40°C
Power consumption *			–
	Drives		–
		SSD iMLC 128 GB	0.8 W
	Expansions		–
		USB	14 W max. ((2 x 500 mA at 5 V) + (2 x 900 mA at 5 V))
		POE	3 W max.

Note: Refer to the *IPC Application Controller User's Manual* (I632) for detail.
* The total power consumption is the sum of the power consumption of all items that are installed in your Industrial Box PC.
To guarantee S8BA UPS operation in combination with our IPC, the specified combination of UPS and power-supply must be used.

Item	Minimum power requirements	
Power supply	240 W	120 W
UPS	120 W	120 W

Environmental Specifications

Item		Specifications
Operation environment	**Ambient operating temperature** *1	0 to 55°C
	Ambient storage temperature *1	-20 to 70°C
	Ambient operating humidity *1	10% to 90% with no condensation
	Ambient storage humidity *1	10% to 90% with no condensation
	Operating atmosphere	No corrosive gases
	Altitude	2,000 m max.
	Noise resistance (during operation)	Conforms to IEC61000-4-4, 2kV (power lines)
	Vibration resistance (during operation)	Conforms to IEC 60068-2-6. For a product with an SSD: 5 to 8.4 Hz with 3.5 mm single amplitude and 8.4 to 150 Hz with 9.8 m/s² for 10 times each in X, Y and Z directions. For a product with a HDD the vibration resistance depends on the mounting orientation *2.
	Shock resistance (during operation)	Conforms to IEC 60068-2-27. 147 m/s², 3 times in each X, Y and Z directions
	Installation method	Book mount, Wall mount
	Pollution degree	2 or less: Conforms to JIS B3502 and IEC 61131-2.
Applicable standards *3		EU Directives: EMC Directive 2014/30/EU (EN 61131-2) and RoHS Directive RCM, EAC

*1. The allowed ambient operating temperature and ambient humidity depend on product type, CPU type, mounting orientation, and storage device type.
*2. Vibration resistance depends on the IPC Application Controller's mounting orientation and storage device type:

Mounting orientation	SSD
Book	9.8 m/s²
Wall	

*3. Refer to the OMRON website (www.ia.omron.com) or contact your OMRON representative for the most recent applicable standards for each part number.

DOWNLOADED FROM SCATTS.CO.UK

3D Pick Manager Solution

Fully integrated 3D part picking solution using Photoneo 3D PhoXi Scanners and easy-to-use 3D Pick Manager

- Click-through sample application wizard quickly guides the user through part & bin setup, camera settings, and picking sequence.
- 3D Pick Manager + Calibration kit includes all the hardware and software necessary to get up and running for 3D pick applications on the Viper robot.
- Available on Viper 650/850 stand-alone robot series
- High-quality Photoneo PhoXi 3D Scanner support fully integrated into the ACE software platform
- Easily upload part CAD files or use simply geometry to teach target parts
- 3D Pick Manager bundles include:
  - Photoneo PhoXi 3D Scanner
  - PoE Cable + Power Injector
  - Ethercat Cable (From PoE to IPC)
- 3D Scanner Calibration kit includes all hardware necessary to teach the robot position relative to the 3D scanner

Specifications

Product name		3D Pick Manager		
	Size	Small	Medium	Large
	Cleanroom/IP	IP65		
Part Number		21857-100	21857-200	21857-300
Scanning Range		384-520 mm	458-1118 mm	870-2150 mm
Optimal Scanning Distance (Sweet Spot)		442 mm	650 mm	1239 mm
Scanning Area (At Sweet Spot)		360 x 286 mm	590 x 421 mm	1082 x 802 mm
Point to Point Distance		0.174	0.286	0.524
Calibration Accuracy		0.05	0.1	0.2
Temporal Noise		0.05	0.1	0.19
Scanning Time		250-2250 ms	250 - 2500 ms	250 - 2750 ms
Dimensions		77 x 68 x 296 mm	77 x 68 x 416 mm	77 x 68 x 616 mm
Baseline		230 mm	450 mm	550 mm
Weight		900 g	950 g	1100 g
Projection Angle		74.55°	78.25°	80.55°

DOWNLOADED FROM SCATTS.CO.UK

DOWNLOADED FROM SCATTS.CO.UK

Dimensions

(Unit: mm)

PhoXi 3D Scanner Small

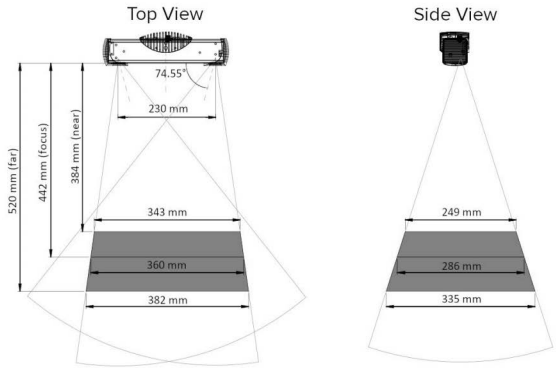

PhoXi 3D Scanner Medium

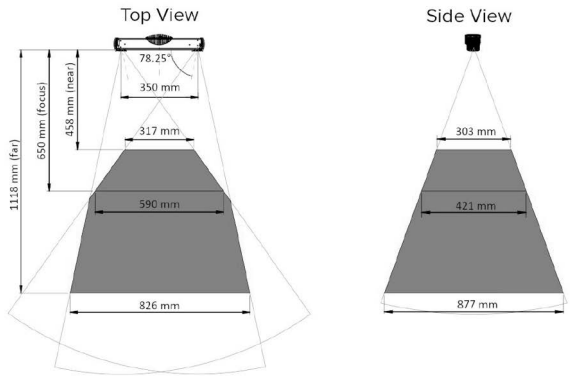

PhoXi 3D Scanner Large

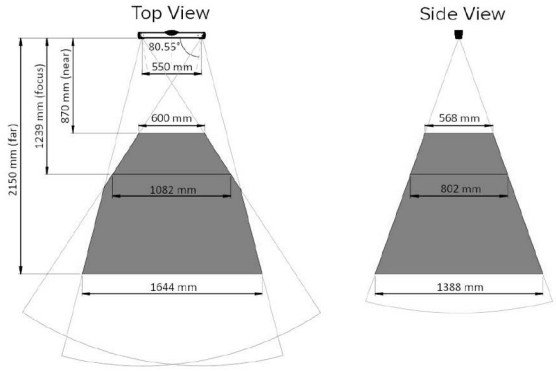

Additional Accessories

Type	Calibration Kit
Part Number	21857-900
Overview	Calibration kit is necessary to calibrate the robot arm position to the 3D Scanner
Required Accessories	An IPC Application Manager (pn: AC1-152000) is required to run the 3D Pick Manager SW and be connected directly to the 3D Scanner

DOWNLOADED FROM SCATTS.CO.UK

Industrial Cameras

Industrial cameras fully integrated with robots

High performance industrial cameras that seamlessly communicate with robots and control environment. The portfolio features the latest CMOS sensor technology to use in automated processes.

- Well-suited to a wide range of robotics applications with high image quality,
- high frame rates, and compact design
- Compatible with all 35+ powerful tools in ACE for vision guidance and inspection, adding integrated vision system by a single click into your program
- Bundled with cables and accessories to connect with robot

ORT Part Number	Image Elements	Effective Pixels	Color / Monchrome	Frame Rate	Lens Mounting	Power Supply	Bundled Accessories	General
31940-010	1/2.9 CMOS	720 x 540	Mono	282.2 fps	C	POE or 10.8 to 26.4 VDC	Camera tripod mount CAT 5e cable, 10m Power I/O cable, 10m	GigE Vision 2.1 Compatible
31940-011	1/2.9 CMOS	720 x 540	Color	282.2 fps				
31940-130	1/1.8 CMOS	1280 x 1024	Mono	61 fps				
31940-131	1/1.8 CMOS	1280 x 1024	Color	61 fps				
31940-160	1/2.9 CMOS	1440 x 1088	Mono	70.7 fps				
31940-161	1/2.9 CMOS	1440 x 1088	Color	70.7 fps				
31940-200	1/1.7 CMOS	1624 x 1240	Mono	54.6 fps				
31940-201	1/1.7 CMOS	1624 x 1240	Color	54.6 fps				
31940-320	1/1.8 CMOS	2048 x 1536	Mono	34.9 fps				
31940-321	1/1.8 CMOS	2048 x 1536	Color	34.9 fps				
31940-500	2/3 CMOS	2448 x 2048	Mono	21.9 fps				
31940-501	2/3 CMOS	2448 x 2048	Color	21.9 fps				
31940-530	1/2.5 CMOS	2592 x 1944	Mono	14 fps				GigE Vision 2.1 Compatible; Rolling Shutter
31940-531	1/2.5 CMOS	2592 x 1944	Color	14 fps				
31940-100	1/2.3 CMOS	3856 x 2764	Mono	10.3 fps				
31940-120	1/1.7 CMOS	4000 x 3000	Mono	9.2 fps				
31940-121	1/1.7 CMOS	4000 x 3000	Color	9.2 fps				

Item	GigE Type						
Part Number	24114-101	24114-200	24114-201	24114-250	24114-251	24114-300	24114-301
Image elements	1/4-inch CCD	1/3-inch CCD	1/3-inch CCD	1/1.8-inch CMOS	1/1.8-inch CMOS	1-inch CMOS	1-inch CMOS
Effective pixels	658(H) x 492(V)	1296(H) x 966(V)	1294(H) x 964(V)	1602(H) x 1202(V)	1600(H) x 1200(V)	2048(H) x 2048(V)	2046(H) × 2046(V)
Color/Monochrome	Color	Monochrome	Color	Monochrome	Color	Monochrome	Color
Frame rate		30 fps	30 fps	60 fps	60 fps	25 fps	25fps
Trigger input	• Software trigger • External trigger			• Software trigger		• Software trigger • External trigger	
I/F	Gigabit Ethernet (1 Gbit/s)						
Lens mounting	• C mount • CS mount			• C mount	• C mount • CS mount	• C mount	
Power supply voltage	PoE or 12 VDC						
Power consumption (PoE/AUX)	2.5 W/2.0 W	2.7 W/2.2 W		2.7 W/2.1 W		3.1 W/2.6 W	
Weight	Approx. 90 g						
Bundled cables	Camera Cable, 10 m (18472-000) Power I/O Cable, 10 m (09454-610)						

DOWNLOADED FROM SCATTS.CO.UK

DOWNLOADED FROM SCATTS.CO.UK

Connection

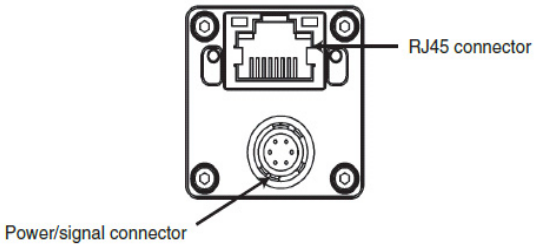

Pin Assignment

Pin No.	Signal name	I/O	Signal voltage
1	POWER IN	IN	10.8 to 26.4 Vdc
2	Isolated input (Line0)	IN	Low: 1.0 V or less High: 3.0 to 26.4 V * Potential difference between isolated input and isolated I/O common
3	Non-isolated I/O (Line2)	IN / OUT	3.0 to 26.4 V/Open Collector
4	Isolated output (Line1)	OUT	Open Collector
5	Isolated I/O common	IN	
6	GND	IN	0 V

Dimensions

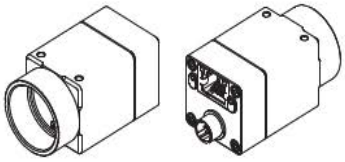

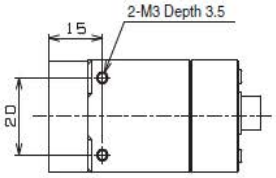

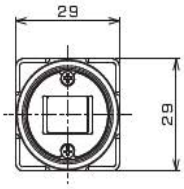

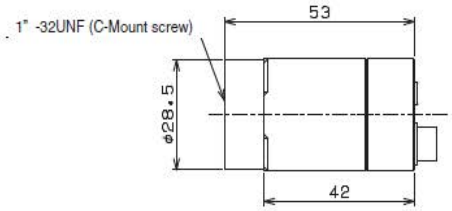

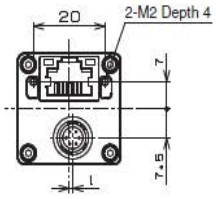

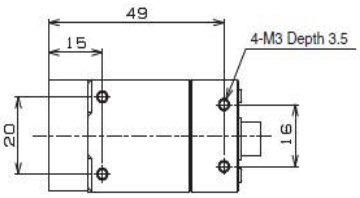

DOWNLOADED FROM SCATTS.CO.UK

T20 Pendant

Excellent operability and ergonomic design

- Tested for a 1.5 meter drop onto industrial flooring
- Displays custom messages
- Emergency stop switch (dual channel circuit)
- Enable switch on back
- Bright display with backlight and contrast adjustment

Dimensions

(Unit: mm)

T20 Pendant

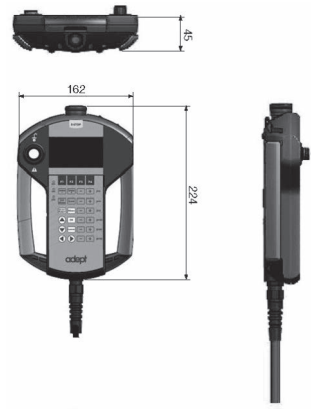

Wall Bracket Dimensions - Optional

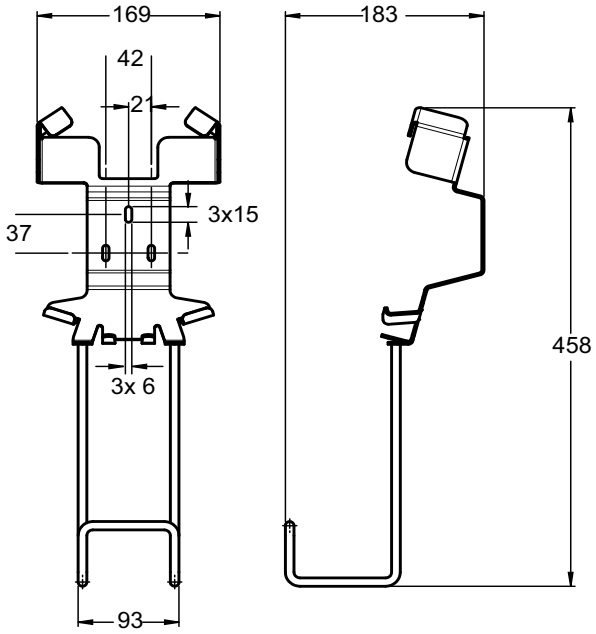

DOWNLOADED FROM SCATTS.CO.UK

DOWNLOADED FROM SCATTS.CO.UK

Connection to SmartController

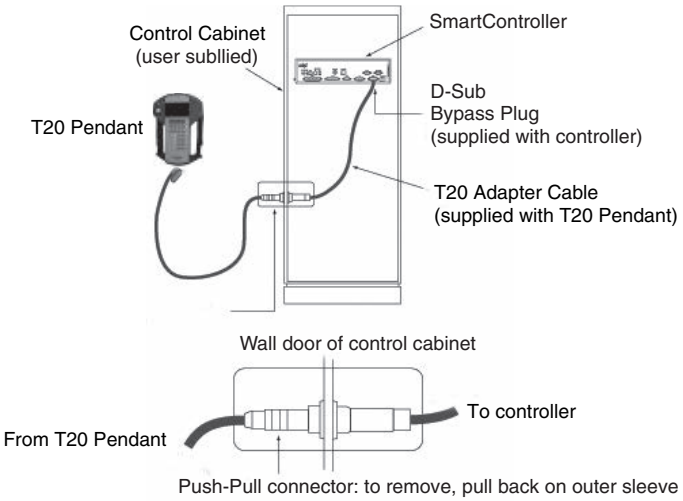

Panel and Front panel Installation

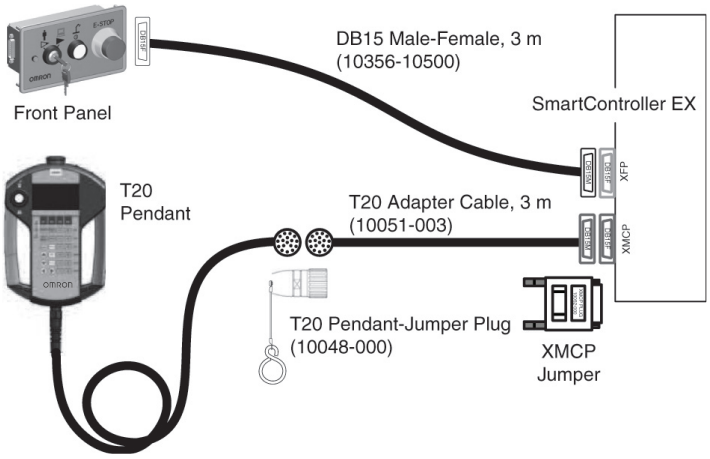

Name	Details	Part Number
Pendant	T20 Pendant, 10 m Cable	10046-010
	T20 Pendant-Jumper Plug	10048-000
	T20 Pendant Wall Bracket	10079-000
	T20 Adapter Cable, 3 m	10051-003

DOWNLOADED FROM SCATTS.CO.UK

Recommended FlexFactory Product

AnyFeeder

Feeding bulk parts for alignment and assembly

- Flip, forward, and backward for easy pickup by robot in combination with vision
- Pickup after flipping parts to identify front or rear
- Easy configuration of AnyFeeder, vision, and robots using wizards
- Flexible feeding of various parts registered in Recipe Manager in ACE or Sysmac
- Available with all part numbers of SCARA, articulated, and parallel robots

Ordering Information

Product Name		SXM-100	SXM-140
FlexFactory Part Number		900-001-161	900-001-162
Omron Part Number		09725-500 *	18819-500 *
Alternative part numbers with integrated backlight	IR	09725-501 *	18819-501 *
	Red	09725-502 *	18819-502 *
Field of Vision		100 x 134 mm	140 x 193 mm
Suitable for Parts	Material	Metal, Plastic, Glass (Stable)	Metal, Plastic, Glass (Stable)
	Main dimensions	< 30 mm	< 45 mm
	Thickness	> 0.15 mm	> 0.15 mm
	Weight	< 15 g	< 25 g
Maximum Weight in Field of Vision		500 g	500 g
Connections	Electrical	1	1
	Pneumatic	-	-
	Serial	1	1
Weight		18 kg	22 kg
Power Requirements		24 VDC 10 A	24 VDC 10 A
Typical Power Usage		100 W (usage dependent)	100 W (usage dependent)
Air Requirements		-	-
Drivers		2 brushless servomotors 130 W	2 brushless servomotors 130 W
Data interface		RS232 (D-SUB 9 connector)	RS232 (D-SUB 9 connector)
Environmental Requirements	Temperature	5 - 45°C	5 - 45°C
	Humidity	5 - 90% (non-condensing)	5 - 90% (non-condensing)
Materials of construction: Main unit, Bulk Container, Feeder platform and surface border		Stainless Steel 1.4301 (304)	Stainless Steel 1.4301 (304)
Bulk storage capacity		3 kg	5 kg

Product Name		SX-240	SX-340
FlexFactory Part Number		900-001-164	900-001-165
Omron Part Number		12480-500 *	14269-500 *
Alternative part numbers with integrated backlight	IR	12480-501 *	14269-501 *
	Red	12480-502 *	14269-502 *
Field of Vision		240 x 320 mm	340 x 453 mm
Suitable for Parts	Material	Metal, Plastic, Glass (Stable)	Metal, Plastic, Glass (Stable)
	Main dimensions	< 75 mm	< 110 mm
	Thickness	> 0.5 mm	> 0.5 mm
	Weight	< 60 g	< 80 g
Maximum Weight in Field of Vision		1500 g	1500 g
Connections	Electrical	1	1
	Pneumatic	1	1
	Serial	1	1
Weight		50 kg / 110 lb	55 kg / 121 lb
Power Requirements		24 VDC 10 A	24 VDC 10 A
Typical Power Usage		100 W (usage dependent)	100 W (usage dependent)
Air Requirements		6 bar / 87 psi, compressed air, filtered, unlubricated	6 bar / 87 psi, compressed air, filtered, unlubricated
Drivers		2 brushless servomotors 130 W	2 brushless servomotors 130 W
Data interface		RS232 (D-SUB 9 connector)	RS232 (D-SUB 9 connector)
Environmental Requirements	Temperature	5 - 45°C	5 - 45°C
	Humidity	5 - 90% (non-condensing)	5 - 90% (non-condensing)
Materials of construction: Main unit, Bulk Container, Feeder platform and surface border		Stainless Steel 1.4301 (304)	Stainless Steel 1.4301 (304)
Bulk storage capacity		10 kg	12 kg

* Power Cable, AnyFeeder, 5m and RS232 Cable, AnyFeeder, 4.5m are provided with the AnyFeeder.

DOWNLOADED FROM SCATTS.CO.UK

DOWNLOADED FROM SCATTS.CO.UK

Dimensions

(Unit: mm)

SXM-100

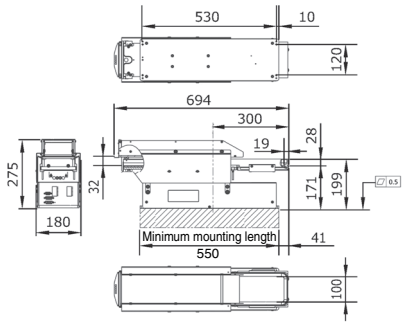

SXM-140

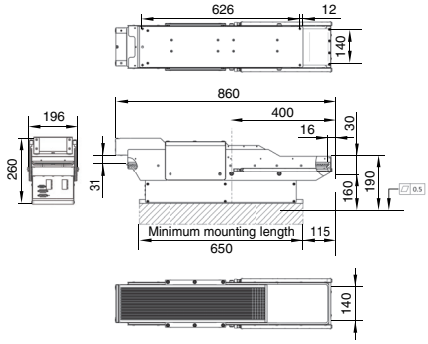

SX-240

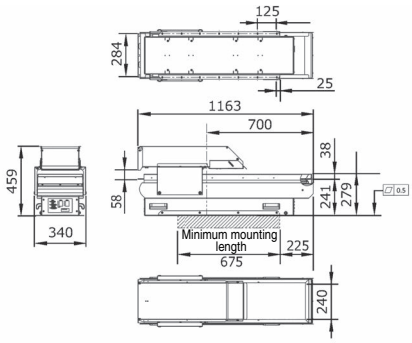

SX-340

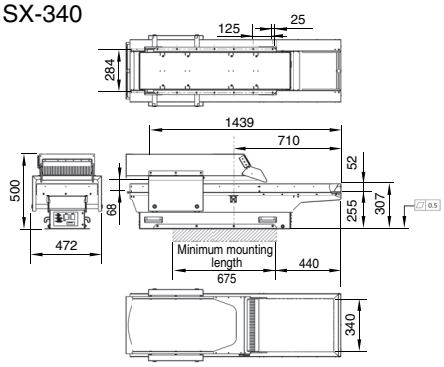

Options

Type	Name/Specifications	FlexFactory Part Numbers	Omron Part Numbers
Backlight	Backlight - IR 875 nm, SXM100	900-000-072	09725-202
	Backlight - Red 630 nm, SXM100	900-000-367	09725-201
	Backlight - IR 875 nm, SXM140	900-000-215	14630-000
	Backlight - Red 630 nm, SXM140	900-000-346	14630-001
	Backlight - IR 875 nm, SX240	900-000-158	05284-208
	Backlight - Red 630 nm, SX240	900-000-238	05284-206
	Backlight - IR 875 nm, SX340	900-000-235	14269-001
	Backlight - Red 630 nm, SX340	900-000-373	14269-002
Surface	Surface, POM-C, Flat, Light Brown, ESD, SXM100	007-001-679	09725-104
	Surface, POM-C, Flat, Black, SXM100 (Not available with backlight)	003-562-000	09725-102
	Surface, POM-C, Flat, Black, ESD, SXM100 (Not available with backlight)	007-001-357	09725-103
	Surface, POM-C, Flat, White, SXM100	002-290-000	09725-101
	Surface, POM-C, Flat, Light Brown, ESD, SXM140	007-001-012	09725-303
	Surface, POM-C, Flat, Black, SXM140 (Not available with backlight)	004-931-000	09725-302
	Surface, POM-C, Flat, White, SXM140	003-965-100	09725-301
	Surface, PVC, Flat, Light Gray, SXM140 (Not available with backlight)	007-001-359	09725-304
	Surface, POM-C Flat, Light Brown, ESD, SX240	007-001-046	05284-103
	Surface, POM-C, Flat, Black, SX240 (Not available with backlight)	001-821-000	05284-102
	Surface, POM-C, Flat, Black, ESD, SX240 (Not available with backlight)	007-001-794	05284-104
	Surface, POM-C, Flat, White, SX240	001-820-000	05284-101
	Surface, PVC, Flat, Gray, SX240 (Not available with backlight)	005-434-000	05284-105
	Surface, POM-C Flat, Light Brown, ESD, SX340	007-001-791	14269-005
	Surface, POM-C, Flat, Black, SX340 (Not available with backlight)	005-386-000	14269-004
	Surface, PVC, Flat, Light Gray, SX340 (Not available with backlight)	007-001-295	14269-006
	Surface, POM-C, Flat, White, SX340	004-439-000	14269-003
Others	ESD Option, SX240	-	05284-204
	Filter, Daylight, M27 x 5	-	09324-000

DOWNLOADED FROM SCATTS.CO.UK

Recommended JR3 Product

Force Sensor

Extending robot capabilities for advanced tactile applications

- Measurement of forces and moments in all three axes
- Digital output connected directly to robot controller
- Interaction with ACE (eV+) by means of commands and modes of operation
- Compatible with eCobra Standard and Pro, Viper, Hornet, and Quattro robots

Ordering Information

Item		Specifications
JR3 Part Number		67M25A3
Omron Part Number		Go to Options table
Outer Diameter		67 mm
Thickness		25 mm
Body Material		AL 2024
Weight		175 g
Nominal Accuracy (All axes)		±1.0%
Operating Temperature		-40 to 65°C
Protection		IP40
F_x and F_y Constants	**Standard Measurement Range**	±200 N
	Digital Resolution	0.050 N
	Single-axis Overload	930 N
F_z Constants	**Standard Measurement Range**	±400 N
	Digital Resolution	0.100 N
	Single-axis Overload	3870 N
M_x and M_y Constants	**Standard Measurement Range**	±12 Nm
	Digital Resolution	0.0032 Nm
	Single-axis Overload	58 Nm
M_z Constants	**Standard Measurement Range**	±12 Nm
	Digital Resolution	0.0032 Nm
	Single-axis Overload	48 Nm
Operating Voltage		9-12 V DC
Sample Rate		8,000 Hz
Sensor Output Port		RJ-11

Dimensions

(Unit: mm)

Sensor, Inner/Outer Adapter for eCobra/Hornet/Quattro

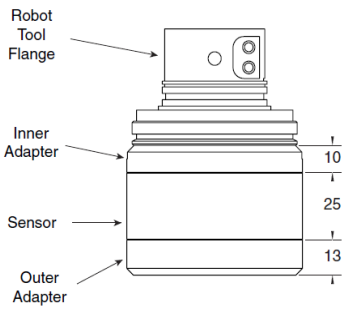

Sensor, Inner/Outer Adapter for Viper

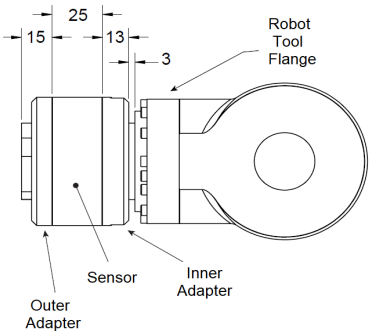

Outer adapters have the same hole and thread pattern as robot tool flanges.

OMRON

DOWNLOADED FROM SCATTS.CO.UK

DOWNLOADED FROM SCATTS.CO.UK

Options

Type	Kit, Intelligent Force Sensing, mounting and cabling	Kit, Sensor mounting and cabling (No sensor)
eCobra 600/800/800 inverted	14161-100	14161-105
Viper 650/850	14161-200	14161-205
Hornet 565 and Quattro 650/800	14161-300	14161-305
Overview	Force sensor, with mounting adapters, flanges, and cabling per robot type	Mounting adapters, flange, and cabling. No sensor included
Purpose	Complete installation kit for a customer without a force sensor	Kit for customers who have an existing JR3 67M25A3 force sensor, and require spares or adapters for another robot type
Common Cables/Accessories	Triplex Cable (DB9 M to eAIB or eMB-60R XBELTIO) Adapter Plate (inner) Adapter Plate (outer) Intelligent Force Sensing User's Guide	
Cobra, Hornet and Quattro only Cables	Upper Cobra Cable (RJ11 6-pin to DB25M) Lower Cobra Cable (Robot base to Triplex EXPIO - DB25F - DB9)	
Viper only Cables	Upper Viper Cable (RJ11 6-pin to CN21) Lower Viper Cable (CN20 to Triplex EXPIO- DB9 F)	

DOWNLOADED FROM SCATTS.CO.UK

DOWNLOADED FROM SCATTS.CO.UK

Installation Diagrams

DOWNLOADED FROM SCATTS.CO.UK

DOWNLOADED FROM SCATTS.CO.UK

DOWNLOADED FROM SCATTS.CO.UK

Options/Accessories

Options/Accessories

Type	Name/Specifications	Part Number
Robot Controller	SmartController EX with Front Panel	19300-000
	SmartController EX (without Front Panel)	19200-000
Pendant	T20 Pendant with 10 m Cable	10046-010
	T20 Pendant-Jumper Plug	10048-000
	T20 Pendant Wall Bracket	10079-000
	T20 Adapter Cable, 3 m	10051-003
Vision Controllers	IPC Application Controller	AC1-152000
	SmartVision MX	14189-901
Camera	Kit, Camera, GigE, POE, 720 x 540, 282.2 fps, B/W, M Series, 10 m camera cables included	31940-010
	Kit, Camera, GigE, POE, 720 x 540, 282.2 fps, Color, M Series, 10 m camera cables included	31940-011
	Kit, Camera, GigE, POE, 1280 x 1024, 61 fps, B/W, M Series, 10 m camera cables included	31940-130
	Kit, Camera, GigE, POE, 1280 x 1024, 61 fps, Color, M Series, 10 m camera cables included	31940-131
	Kit, Camera, GigE, POE, 1440 x 1088, 70.7 fps, B/W, M Series, 10 m camera cables included	31940-160
	Kit, Camera, GigE, POE, 1440 x 1088, 70.7 fps, Color, M Series, 10 m camera cables included	31940-161
	Kit, Camera, GigE, POE, 1624 x 1240, 54.6 fps, B/W, M Series, 10 m camera cables included	31940-200
	Kit, Camera, GigE, POE, 1624 x 1240, 54.6 fps, Color, M Series, 10 m camera cables included	31940-201
	Kit, Camera, GigE, POE, 2048 x 1536, 34.9 fps, B/W, M Series, 10 m camera cables included	31940-320
	Kit, Camera, GigE, POE, 2048 x 1536, 34.9 fps, Color, M Series, 10 m camera cables included	31940-321
	Kit, Camera, GigE, POE, 2448 x 2048, 21.9 fps, B/W, M Series, 10 m camera cables included	31940-500
	Kit, Camera, GigE, POE, 2448 x 2048, 21.9 fps, Color, M Series, 10 m camera cables included	31940-501
	Kit, Camera, GigE, POE, 2592 x 1944, 14 fps, B/W, M Series, 10 m camera cables included	31940-530
	Kit, Camera, GigE, POE, 2592 x 1944, 14 fps, Color, M Series, 10 m camera cables included	31940-531
	Kit, Camera, GigE, POE, 3856 x 2764, 10.3 fps, B/W, M Series, 10 m camera cables included	31940-100
	Kit, Camera, GigE, POE, 4000 x 3000, 9.2 fps, B/W, M Series, 10 m camera cables included	31940-120
	Kit, Camera, GigE, POE, 4000 x 3000, 9.2 fps, Color, M Series, 10 m camera cables included	31940-121
	GigE PoE, 658 x 492 pixels, 120 fps, Color, CCD (1/4-inch equivalent), 10 m camera cables included	24114-101
	GigE PoE, 1296 x 966 pixels, 30 fps, Monochrome, CCD (1/3-inch equivalent), 10 m camera cables included	24114-200
	GigE PoE, 1294 x 964 pixels, 30 fps, Color, CCD (1/3-inch equivalent), 10 m camera cables included	24114-201
	GigE PoE, 1602 x 1202 pixels, 60 fps, Monochrome, CMOS (1/1.8-inch equivalent), 10 m camera cables included	24114-250
	GigE PoE, 1600 x 1200 pixels, 60 fps, Color, CMOS (1/1.8-inch equivalent), 10 m camera cables included	24114-251
	GigE PoE, 2048 x 2048 pixels, 25 fps, Monochrome, CMOS (1-inch equivalent), 10 m camera cables included	24114-300
	GigE PoE, 2046 x 2046 dots, 25 fps, Color, CMOS (1-inch equivalent), 10 m camera cables included	24114-301

DOWNLOADED FROM SCATTS.CO.UK

DOWNLOADED FROM SCATTS.CO.UK

Type	Name/Specifications	Part Number
Belt Encoder (Conveyor-Tracking)	Encoder Kit IP65	09742-001
	Y-Adapter Cable, 3 m	09443-000
	Encoder Extension Cable, 5 m	09446-050
	SCEX-BELT,Y-Adapter Cable, 0.5 m	09550-000
	XBELTIO Cable, 0.6 m	13463-000
Additional I/O Options	IO Blox (connect to robot), 8 inputs/8 outputs, 0.3 m cables included	90356-30200
	IO Block (connect to previous IO Blox), 8 inputs/8 outputs, 0.3 m cables included	90356-30100
	IO Blox-to-robot Cable, 3 m	04677-030
	IO Blox-to-IO Blox Cable, 0.3 m	04679-003
	IO Blox-to-IO Blox Cable, 3 m	04679-030
	XIO Termination Block, 12inputs/8 outputs, cables included (1.8 m)	90356-40100
	XDIO Termination Block, 50 pin, cables included (2m)	09747-000
Front panel	Front Panel Cable, 3 m	92546-10358
Power Supply/Cable	AC Power Cable, 5 m	04118-000
	24 VDC Power Cable, 5 m	04120-000
	24 VDC, 6.5 A, 150 W (Front Mounting), Power Supply	S8FS-G15024C *1
	24 VDC, 6.5 A, 150 W (DIN-Rail Mounting), Power Supply	S8FS-G15024CD *1
	1394 Cable, 4.5 m	13632-045
	XSYSTEM Cable Assembly, 1.8 m	13323-000
	XSYSTEM Cable Assembly (with ENET management port), 1.8 m	13323-100
	XIO Breakout Cable	04465-000
	DB9 Splitter, 0.3 m	00411-000
	eAIB XSYS Cable, 4.5 m	11585-000
	Ethernet Cable	XS6W-6LSZH8SS[ ][ ][ ]CM-Y *2
	Industrial Switching Hubs	W4S1-05C *3
Solenoid Valve Kit	eCobra robots	02853-000
Cable Seal Kit	Hornet 565 IP65/67, Quattro 650HS IP65/67, Quattro 800HS IP65/67	08765-000
	Quattro 650HS Standard/Quattro 800HS Standard	09564-000
	eCobra 800 IP65/67	04813-000
	eCobra 800 Inverted IP65	09073-000
i4 Specific Accessories	Bracket, Wall Mount	20089-000
	Plate, eCobra Adapter (Allows i4H to be mounting with eCobra mount hole pattern)	21636-000
	Camera Bracket Mount	18908-000
	Solenoid Valve Kit	19165-000
Software Licenses	Automation Control Environment (for ACE 4.x)	Please download it from following URL: https://robotics.omron.com/browse-documents/?dir_id=8
	ACE PackManager (for ACE 4.x and Sysmac Studio 1.2x)	20409-000
	Robot Vision Manager (for ACE 4.x and Sysmac Studio 1.2x)	20410-000
	ACE PackManager with ACE Robot Vision Manager (for ACE 4.x and Sysmac Studio 1.2x) This license contains an ACE PackManager license and an ACE Robot Vision Manager license.	20433-000
	Sysmac Studio Standard Edition Version 1.xx	SYSMAC-SE201L
	Sysmac Studio 3D Simulation Option	SYSMAC-SA401L-64

DOWNLOADED FROM SCATTS.CO.UK

DOWNLOADED FROM SCATTS.CO.UK

System configuration for Robotics Integration Solution

Robot Controllers

Robot	Description
i4H, iX3, iX4, eCobra	iCS-ECAT 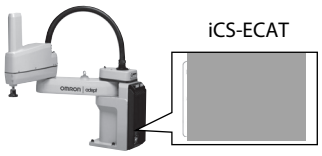
Viper	eCS-ECAT
NJ501-R	Machine Automation Controller

Basic Configuration

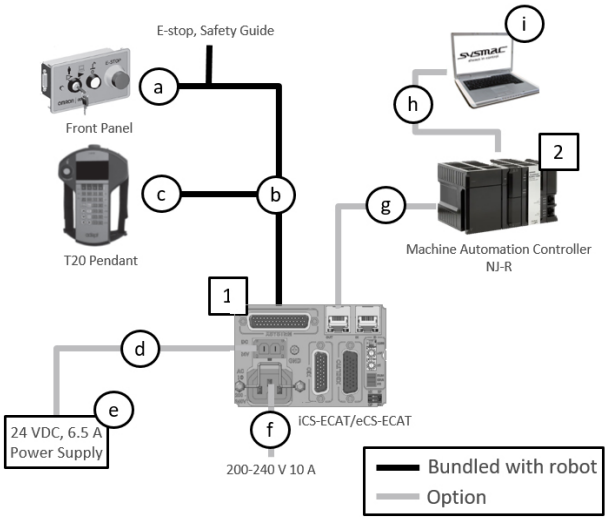

i4H, iX3, iX4, eCobra, Viper

Part	Name	Part Number	Note	Qty
1	Robot	RL[ ][ ][ ]-[ ][ ][ ][ ]		1
a	Front Panel with Cable	90356-10358 or 92546-10358	Bundled with Robot	(1)
b	XSYSTEM Cable (with ENET management port)	13323-100	Bundled with Robot	(1)
c	T20 Pendant with Cable	10046-010		1
d	24 VDC Power Cable	04120-000		1
e	24 VDC, 6.5 A Power Supply	S8FS-G15024C or S8FS-G15024D		2
f	AC Power Cable	04118-000		1
g	Ethernet Cable (EtherCAT network)	XS6W-6LSZH8SS[ ][ ][ ]CM-Y	Can be used for EtherCAT connection	1
h	Ethernet Cable (Ethernet network)	XS6W-6LSZH8SS[ ][ ][ ]CM-Y		1
2	Machine Automation Controller NJ501-R Series	NJ501-R[ ][ ][ ]	Up to 8 robots can be connected through EtherCAT	1
i	Automation software Sysmac Studio	SYSMAC-SE2[ ][ ][ ]	Additional Simulation license (SYSMAC-SE200D-64) can be added	1 *3

DOWNLOADED FROM SCATTS.CO.UK

DOWNLOADED FROM SCATTS.CO.UK

Vision tracking robot system

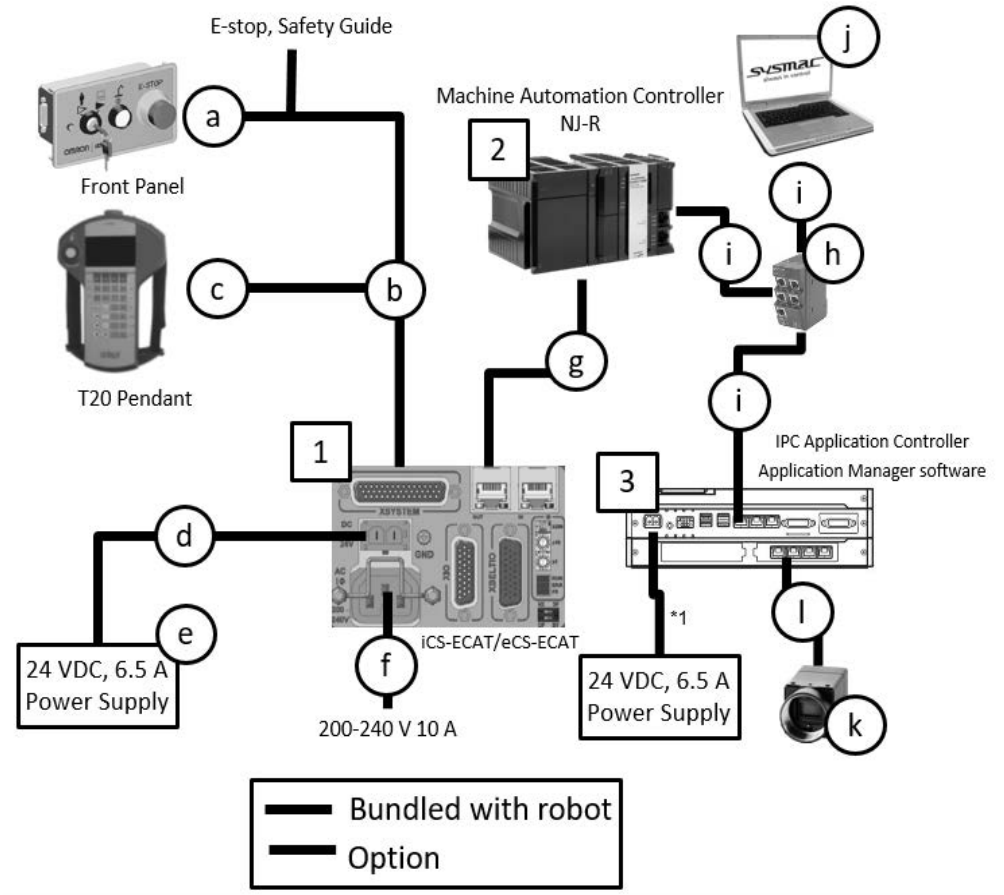

i4H, iX3, iX4, eCobra, Viper

Part	Name	Part Number	Note	Qty
1	Robot	R[ ][ ][ ][ ]-[ ][ ][ ][ ]		1
a	Front Panel with Cable	90356-10358 or 92546-10358	Bundled with Robot	(1)
b	XSYSTEM Cable (with ENET management port)	13323-100	Bundled with Robot	(1)
c	T20 Pendant with Cable	10046-010		1
d	24 VDC Power Cable	04120-000		1
e	24 VDC, 6.5 A Power Supply	S8FS-G15024C or S8FS-G15024D		2
f	AC Power Cable	04118-000		1
g	Ethernet Cable (EtherCAT network)	XS6W-6LSZH8SS[ ][ ][ ]CM-Y	Can be used for EtherCAT connection	1
h	Industrial Switching Hubs	W4S1-05C		1
i	Ethernet Cable (Ethernet network)	XS6W-6LSZH8SS[ ][ ][ ]CM-Y	Bundling a 24 VDC connector	3
2	Machine Automation Controller NJ501-R Series	NJ501-R[ ][ ][ ]	Up to 8 robots can be connected through EtherCAT	1
j	Automation software Sysmac Studio	SYSMAC-SE2[ ][ ][ ]	Additional Simulation license (SYSMAC-SE200D-64) can be added	1
3	IPC Application Controller	AC1-152000	Bundling a 24 VDC connector	1
k	Camera	319[ ][ ]-[ ][ ][ ]		1 *2
l	Camera Ethernet Cable	---	Bundled with Camera	1 *2
---	PackManager with Robot Vision Manager License	20433-000	Included with Dongle	1

*1. User-supplied shielded power cable.
*2. Qty depends on system.

DOWNLOADED FROM SCATTS.CO.UK

DOWNLOADED FROM SCATTS.CO.UK

Conveyor tracking robot system

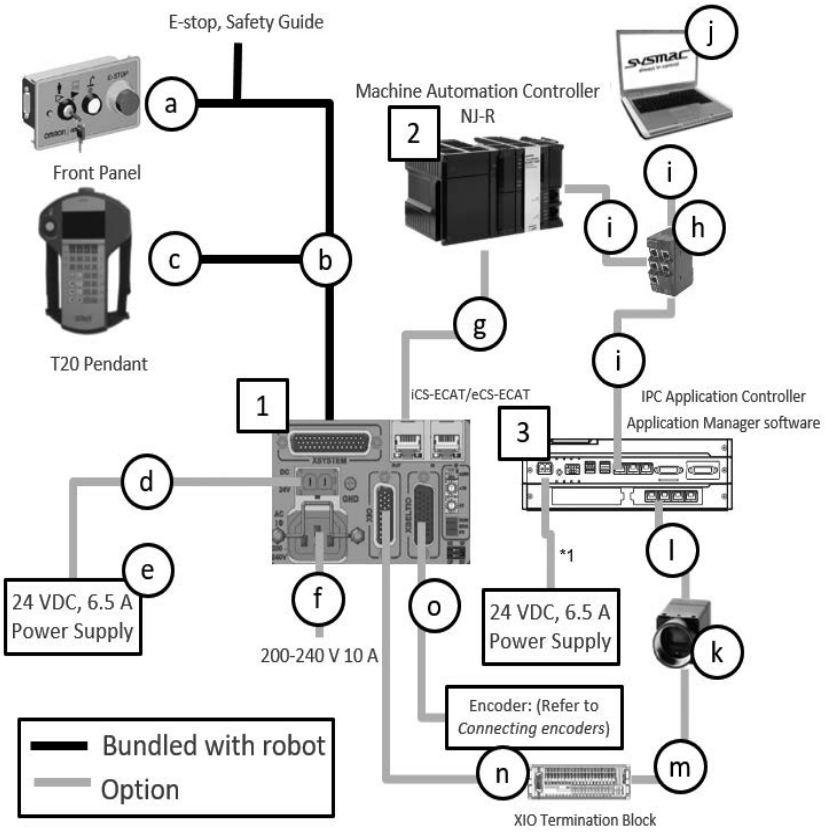

i4H, iX3, iX4, eCobra, Viper

Part	Name	Part Number	Note	Qty
1	Robot	R[ ][ ][ ][ ][ ]-[ ][ ][ ][ ]		1
a	Front Panel with Cable	90356-10358 or 92546-10358	Bundled with Robot	(1)
b	XSYSTEM Cable (with ENET management port)	13323-100	Bundled with Robot	(1)
c	T20 Pendant with Cable	10046-010		1
d	24 VDC Power Cable	04120-000		1
e	24 VDC, 6.5 A Power Supply	S8FS-G15024C or S8FS-G15024D		1
f	AC Power Cable	04118-000		1
g	Ethernet Cable (EtherCAT network)	XS6W-6LSZH8SS[ ][ ][ ]CM-Y	Can be used for EtherCAT connection	1
h	Industrial Switching Hubs	W4S1-05C		1
i	Ethernet Cable (Ethernet network)	XS6W-6LSZH8SS[ ][ ][ ]CM-Y		3
2	Machine Automation Controller NJ501-R Series	NJ501-R[ ][ ][ ]	Up to 8 robots can be connected through EtherCAT	1
j	Automation software Sysmac Studio	SYSMAC-SE2[ ][ ][ ]	Additional Simulation license (SYSMAC-SE200D-64) can be added	1
3	IPC Application Controller	AC1-152000	Bundling a 24 VDC connector	1
k	Camera	319[ ][ ]-[ ][ ][ ]		1 *2
l	Camera Ethernet Cable	---	Bundled with Camera	1 *2
m	Camera IO Cable			1 *2
n	XIO Cable	90356-40100	Bundled with XIO Termination block	1
o	XBELTIO Cable	13463-000		1
	PackManager with Robot Vision Manager License	20433-000	Included with Dongle	1

*1. User-supplied shielded power cable.
*2. Qty depends on system.

DOWNLOADED FROM SCATTS.CO.UK

DOWNLOADED FROM SCATTS.CO.UK

Standalone Robotics System Configuration

Amplifiers with Built-in Controller

Robot	Description	
Hornet 565, eCobra	Embedded into the robot. (eAIB)	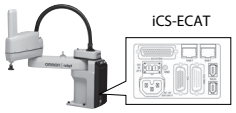
Cobra 450/500/650, Viper	A separate amplifier (eMotionBlox). Bundled with the robot.	
Quattro	A separate controller (SmartController EX). Bundled with the robot. eAIB amplifier/controller embedded into the robot. (The SmartController EX can be sold separately.)	
i4L	Embedded Into the robot (iCS-ENET)	

Basic configuration

Control by eAIB/eMotionBlox

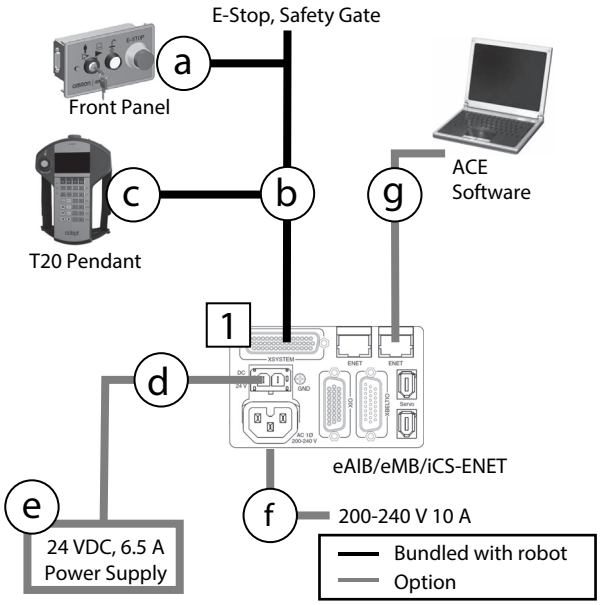

Control by SmartController EX

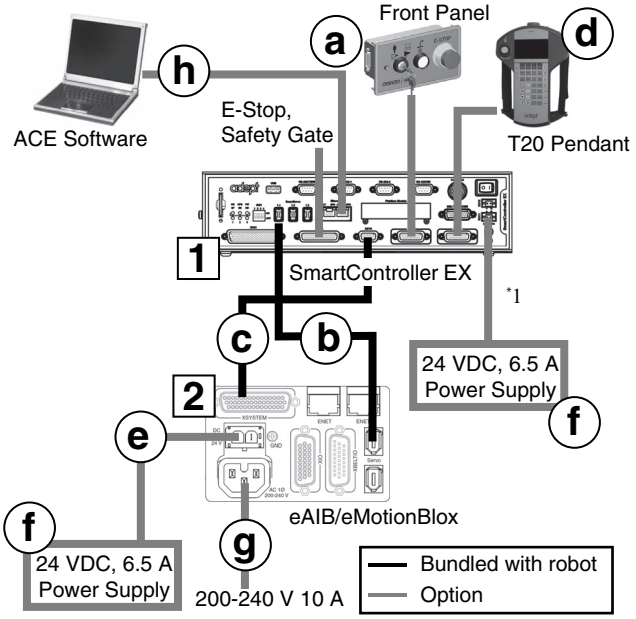

Cobra, eCobra, Viper, Hornet, i4L

Part	Name	Part Number	Note	Qty
1	Robot	17[ ][ ][ ]-[ ][ ][ ][ ][ ]		1
a	Front Panel with Cable *1	90356-10358 or 92546-10358	Bundled with Robot	(1)
b	eAIB XSYSTEM Cable	13323-000	Bundled with Robot	(1)
c	T20 Pendant with Cable	10046-010		1
d	24 VDC Power Cable	04120-000		1
e	24 VDC, 6.5 A Power Supply	S8FS-G15024C or S8FS-G15024D		1
f	AC Power Cable	04118-000		1
g	Ethernet Cable	XS6W-6LSZH8SS[ ][ ][ ]CM-Y		1
---	ACE PackManager License	20409-000	When you create robot programs without using wizards, the ACE license is not required.	1

*1. The Front Panel is not included with the Cobra 450/500/650.

Quattro

Part	Name	Part Number	Note	Qty
2	Robot	17214-2[ ][ ][ ][ ]		1
1	SmartController EX	09200-000	Bundled with Robot	(1)
a	Front Panel with Cable	90356-10358	Bundled with Robot	(1)
b	IEEE 1394 cable	13632-045	Bundled with Robot	(1)
c	eAIB XSYS Cable	11585-000	Bundled with Robot	(1)
d	T20 Pendant with Cable	10046-010		1
e	24 VDC Power Cable	04120-000		1
f	24 VDC, 6.5 A Power Supply	S8FS-G15024C or S8FS-G15024D		2
g	AC Power Cable	04118-000		1
h	Ethernet Cable	XS6W-6LSZH8SS[ ][ ][ ] CM-Y		1
---	ACE PackManager License	20409-000	When you create robot programs without using wizards, the ACE license is not required.	1

*1. User-supplied shielded power cable.

DOWNLOADED FROM SCATTS.CO.UK

DOWNLOADED FROM SCATTS.CO.UK

Vision tracking robot system

Control by eAIB/eMotionBlox with IPC Application Controller (When using a vision system)

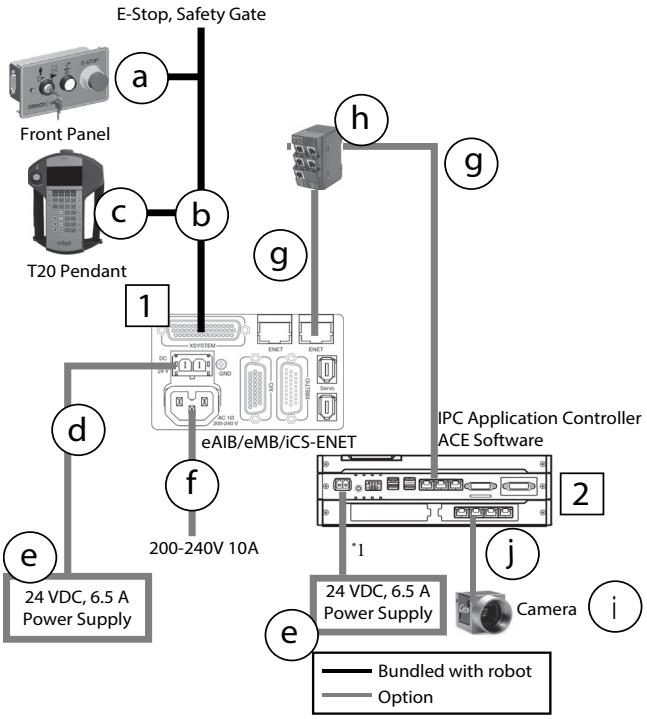

Control by SmartController EX (When using a vision system)

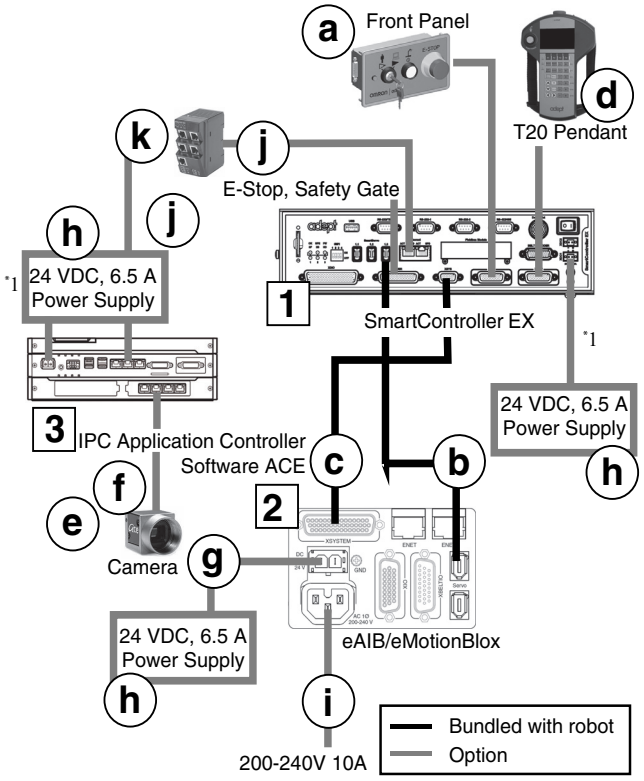

Cobra, eCobra, Viper, Hornet, i4L

Part	Name	Part Number	Note	Qty
1	Robot	17[ ][ ][ ]-[ ][ ][ ][ ][ ]		1
a	Front Panel with Cable *2	90356-10358 or 92546-10358	Bundled with Robot	(1)
b	eAIB XSYSTEM Cable	13323-000	Bundled with Robot	(1)
c	T20 Pendant with Cable	10046-010		1
d	24 VDC Power Cable	04120-000		1
e	24 VDC, 6.5 A Power Supply	S8FS-G15024C or S8FS-G15024D		2
f	AC Power Cable	04118-000		1
g	Ethernet Cable	XS6W-6LSZH8SS [ ][ ][ ]CM-Y		2
h	Industrial Switching Hubs	W4S1-05C		1
2	IPC Application Controller	AC1-152000	Bundling a 24 VDC connector	1
i	Camera	319[ ][ ]-[ ][ ][ ]		1 *3
j	Camera Ethernet Cable	---	Bundled with Camera	1 *3
---	ACE PackManager with Robot Vision Manager License	20433-000	Included with Dongle	1

*1. User-supplied shielded power cable.
*2. The Front Panel is not included with the Cobra.
*3. Qty depends on system.

Quattro

Part	Name	Part Number	Note	Qty
2	Robot	17214-2[ ][ ][ ][ ]		1
1	SmartController EX	09200-000	Bundled with Robot	(1)
a	Front Panel with Cable	90356-10358	Bundled with Robot	(1)
b	IEEE 1394 cable	13632-045	Bundled with Robot	(1)
c	eAIB XSYS Cable	11585-000	Bundled with Robot	(1)
d	T20 Pendant with Cable	10046-010		1
3	IPC Application Controller	AC1-152000	Bundling a 24 VDC connector	1
e	Camera	319[ ][ ]-[ ][ ][ ]		1 *2
f	Camera Ethernet Cable	---	Bundled with Camera	1 *2
g	24 VDC Power Cable	04120-000		1
h	24 VDC, 6.5 A Power Supply	S8FS-G15024C or S8FS-G15024D		3
i	AC Power Cable	04118-000		1
j	Ethernet Cable	XS6W-6LSZH8SS [ ][ ][ ]CM-Y		2
k	Industrial Switching Hubs	W4S1-05C		1
---	ACE PackManager with Robot Vision Manager License	20433-000	Included with Dongle	1

*1. User-supplied shielded power cable.
*2. Qty depends on system.

DOWNLOADED FROM SCATTS.CO.UK

DOWNLOADED FROM SCATTS.CO.UK

Conveyor tracking robot system

Control by eAIB/eMotionBlox with IPC Application Controller (When using a vision system)

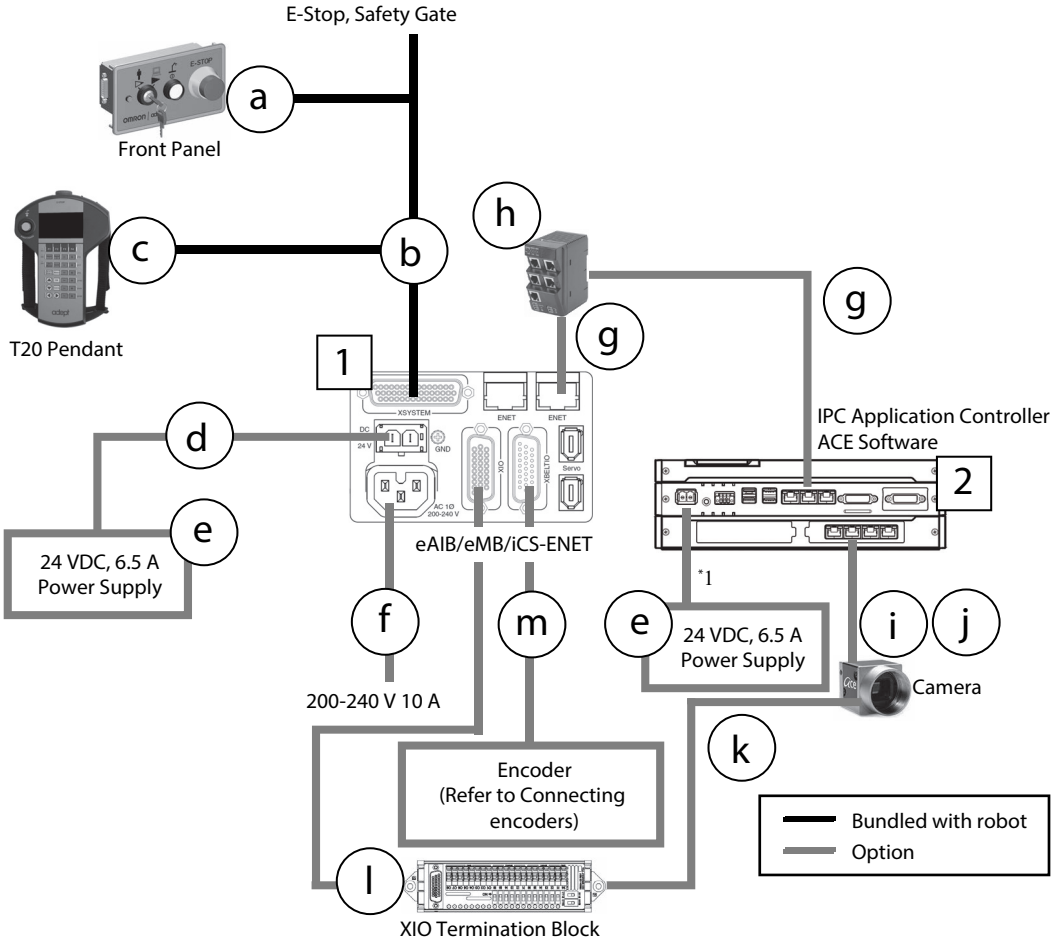

Cobra, eCobra, Viper, Hornet, i4L

Part	Name	Part Number	Note	Qty
1	Robot	17[ ][ ][ ]-[ ][ ][ ][ ]		1
a	Front Panel with Cable *2	90356-10358 or 92546-10358	Bundled with Robot	(1)
b	eAIB XSYSTEM Cable	13323-000	Bundled with Robot	(1)
c	T20 Pendant with Cable	10046-010		1
d	24 VDC Power Cable	04120-000		2
e	24 VDC, 6.5 A Power Supply	S8FS-G15024C or S8FS-G15024D		1
f	AC Power Cable	04118-000		1
g	Ethernet Cable	XS6W-6LSZH8SS[ ][ ][ ]CM-Y		2
h	Industrial Switching Hubs	W4S1-05C		1
2	IPC Application Controller	AC1-152000	Bundling a 24 VDC connector	1
i	Camera	319[ ][ ]-[ ][ ][ ]		1 *3
j	Camera Ethernet Cable	---	Bundled with Camera	1 *3
k	Camera IO Cable	---	Bundled with Camera	1 *3
l	XIO Cable	90356-40100	Bundled with XIO Termination Block	1
m	XBELTIO Cable	13463-000		1
---	ACE PackManager with Robot Vision Manager License	20433-000	Included with Dongle	1

*1. User-supplied shielded power cable.

*2. The Front Panel is not included with the Cobra.

*3. Qty depends on system.

DOWNLOADED FROM SCATTS.CO.UK

DOWNLOADED FROM SCATTS.CO.UK

Conveyor tracking robot system by SCEX

Control by SCEX with IPC Application Controller (When using a vision system)

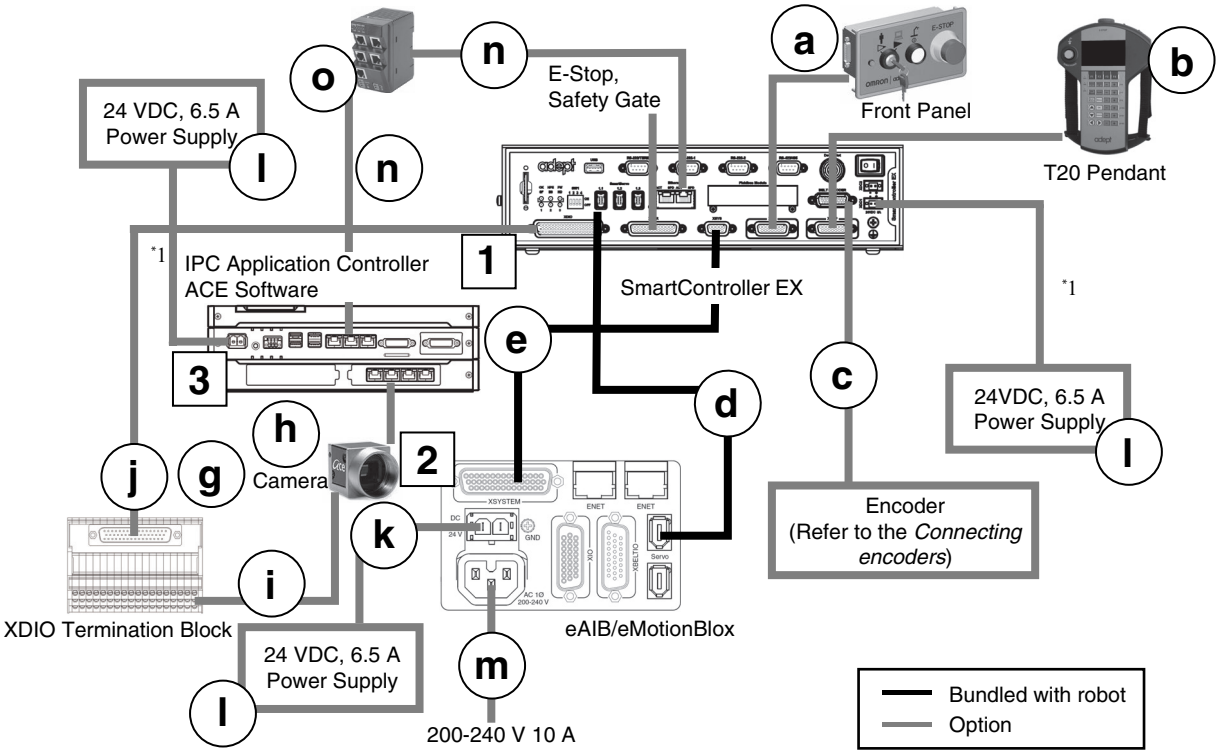

Cobra, eCobra, Viper, Hornet, i4L

Part	Name	Part Number	Note	Qty
1	SmartController EX	19300-000		1
a	Front Panel with Cable	90356-10358 or 02546-10358	Bundled with SmartController EX	(1)
b	T20 Pendant with Cable	10046-010		1
c	SCEX-BELT, Y-Adapter Cable	09550-000		1
2	Robot Add on	17[ ][ ]3-[ ][ ][ ][ ][ ]		1
d	IEEE 1394 Cable	13632-045	Bundled with Robot Add on	(1)
e	eAIB XSYS Cable	11585-000	Bundled with Robot Add on	(1)
3	IPC Application Controller	AC1-152000	Bundling a 24 VDC connector	1
g	Camera	319[ ][ ]-[ ][ ][ ]		1 *2
h	Camera Ethernet Cable	---	Bundled with Camera	1 *2
i	Camera IO Cable	---	Bundled with Camera	1 *2
j	XDIO Cable	09747-000	Bundled with XDIO Termination Block	1
k	24 VDC Power Cable	04120-000		1
l	24 VDC, 6.5 A Power Supply	S8FS-G15024C or S8FS-G15024D		3
m	AC Power Cable	04118-000		1
n	Ethernet Cable	XS6W-6LSZH8SS [ ][ ][ ]CM-Y		2
o	Industrial Switching Hubs	W4S1-05C		1
---	ACE PackManager with Robot Vision Manager License	20433-000	Included with Dongle	1

*1. User-supplied shielded power cable.
*2. Qty depends on system.

Quattro

Part	Name	Part Number	Note	Qty
2	Robot	17214-2[ ][ ][ ][ ]		1
1	SmartController EX	09200-000	Bundled with Robot	(1)
a	Front Panel with Cable	90356-10358	Bundled with Robot	(1)
d	IEEE 1394 Cable	13632-045	Bundled with Robot	(1)
e	eAIB XSYS Cable	11585-000	Bundled with Robot	(1)
b	T20 Pendant with Cable	10046-010		1
c	SCEX-BELT, Y-Adapter Cable	09550-000		1
3	IPC Application Controller	AC1-152000	Bundling a 24 VDC connector	1
g	Camera	319[ ][ ]-[ ][ ][ ]		1 *2
h	Camera Ethernet Cable	---	Bundled with Camera	1 *2
i	Camera IO Cable	---	Bundled with Camera	1 *2
j	XDIO Cable	09747-000	Bundled with XDIO Termination Block	1
k	24 VDC Power Cable	04120-000		1
l	24 VDC, 6.5 A Power Supply	S8FS-G15024C or S8FS-G15024D		3
m	AC Power Cable	04118-000		1
n	Ethernet Cable	XS6W-6LSZH8SS [ ][ ][ ]CM-Y		2
o	Industrial Switching Hubs	W4S1-05C		1
---	ACE PackManager with Robot Vision Manager License	20433-000	Included with Dongle	1

*1. User-supplied shielded power cable.
*2. Qty depends on system.

DOWNLOADED FROM SCATTS.CO.UK

DOWNLOADED FROM SCATTS.CO.UK

Conveyor tracking dual-robot system

2 robots controlled by SCEX with IPC Application Controller (When using a vision system)

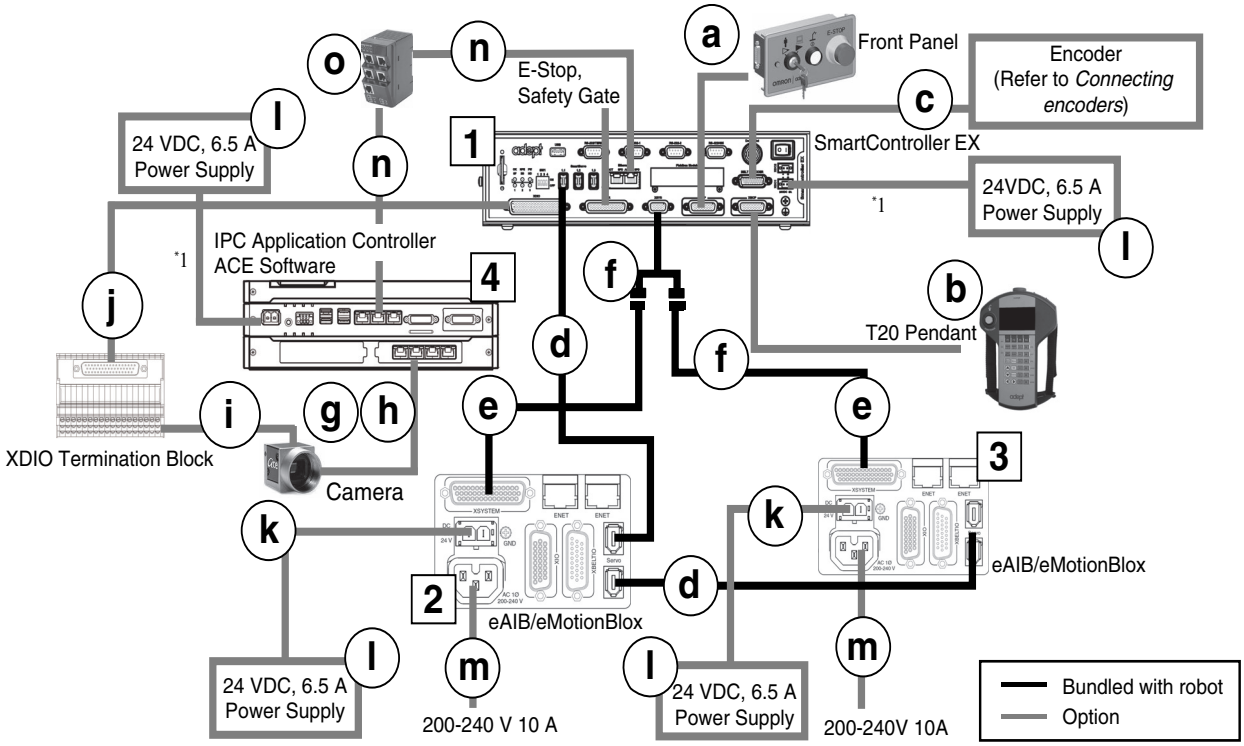

Cobra, eCobra, Viper, Hornet, i4L

Part	Name	Part Number	Note	Qty
1	SmartController EX	19300-000		1
a	Front Panel with Cable	90356-10358 or 92546-10358	Bundled with SmartController EX	(1)
b	T20 Pendant with Cable	10046-010		1
c	SCEX-BELT, Y-Adapter Cable	09550-000		1
2, 3	Robot Add on	17[ ][ ]3-[ ][ ][ ][ ][ ]		2
d	IEEE 1394 cable	13632-045	Bundled with Robot Add on	(2)
e	eAIB XSYS Cable	11585-000	Bundled with Robot Add on	(2)
f	DB9 splitter	00411-000	Bundled with Robot Add on	(2)
4	IPC Application Controller	AC1-152000	Bundling a 24 VDC connector	1
g	Camera	319[ ][ ]-[ ][ ][ ]		1 *2
h	Camera Ethernet Cable	---	Bundled with Camera	1 *2
i	Camera IO Cable	---	Bundled with Camera	1 *2
j	XDIO Cable	09747-000	Bundled with XDIO Termination Block	1
k	24 VDC Power Cable	04120-000		2
l	24 VDC, 6.5 A Power Supply	S8FS-G15024C or S8FS-G15024D		4
m	AC Power Cable	04118-000		2
n	Ethernet Cable	XS6W-6LSZH8SS[ ][ ][ ] CM-Y		2
o	Industrial Switching Hubs	W4S1-05C		1
---	ACE PackManager with Robot Vision Manager License	20433-000	Included with Dongle	1

*1. User-supplied shielded power cable.
*2. Qty depends on system.

Quattro

Part	Name	Part Number	Note	Qty
2	Robot	17214-2[ ][ ][ ][ ]		1
1	SmartController EX	09200-000	Bundled with Robot	(1)
a	Front Panel with Cable	90356-10358	Bundled with Robot	(1)
d	IEEE 1394 cable	13632-045	Bundled with Robot	(1)
e	eAIB XSYS Cable	11585-000	Bundled with Robot	(1)
b	T20 Pendant with Cable	10046-010		1
c	SCEX-BELT, Y-Adapter Cable	09550-000		1
3	Robot Add on	17203-2[ ][ ][ ][ ]		1
d	IEEE 1394 cable	13632-045	Bundled with Robot Add on	(1)
e	eAIB XSYS Cable	11585-000	Bundled with Robot Add on	(1)
f	DB9 splitter	00411-000	Bundled with Robot Add on	(1)
4	IPC Application Controller	AC1-152000	Bundling a 24 VDC connector	1
g	Camera	319[ ][ ]-[ ][ ][ ]		1 *2
h	Camera Ethernet Cable	---	Bundled with Camera	1 *2
i	Camera IO Cable	---	Bundled with Camera	1 *2
j	XDIO Cable	09747-000	Bundled with XDIO Termination Block	1
k	24 VDC Power Cable	04120-000		2
l	24 VDC, 6.5 A Power Supply	S8FS-G15024C or S8FS-G15024D		4
m	AC Power Cable	04118-000		2
n	Ethernet Cable	XS6W-6LSZH8SS[ ][ ][ ] CM-Y		2
o	Industrial Switching Hubs	W4S1-05C		1
---	ACE PackManager with Robot Vision Manager License	20433-000	Included with Dongle	1

*1. User-supplied shielded power cable.
*2. Qty depends on system.

DOWNLOADED FROM SCATTS.CO.UK

DOWNLOADED FROM SCATTS.CO.UK

Connecting encoders

SmartController EX

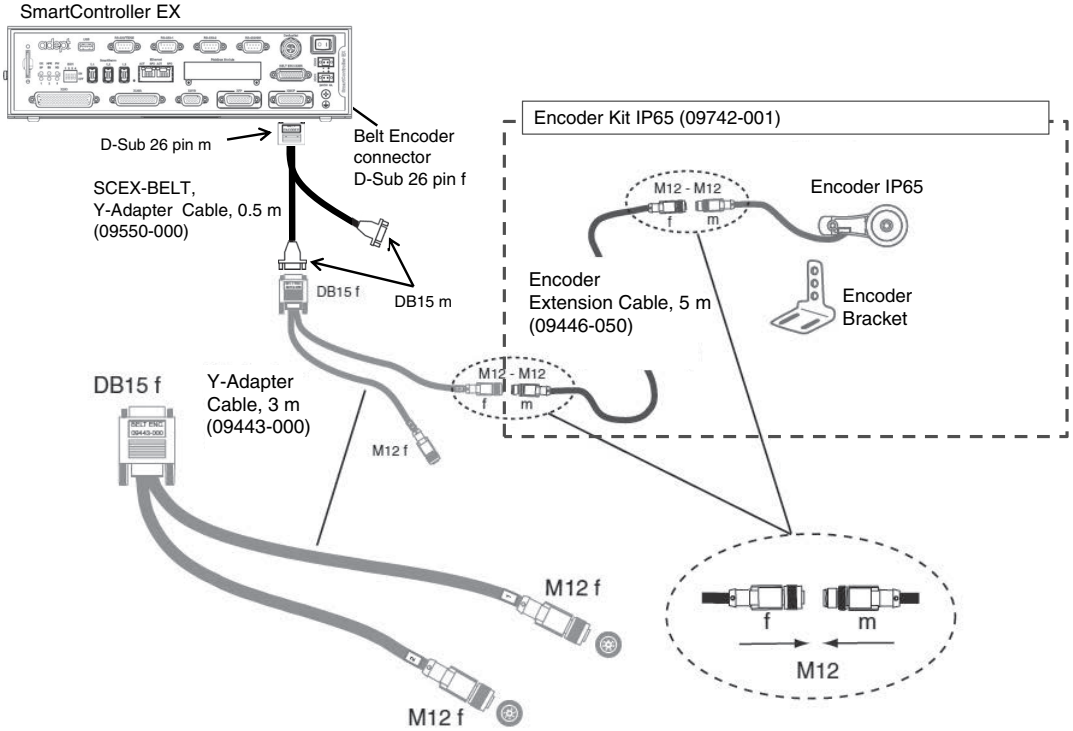

eAIB/eMotionBlox/iCS

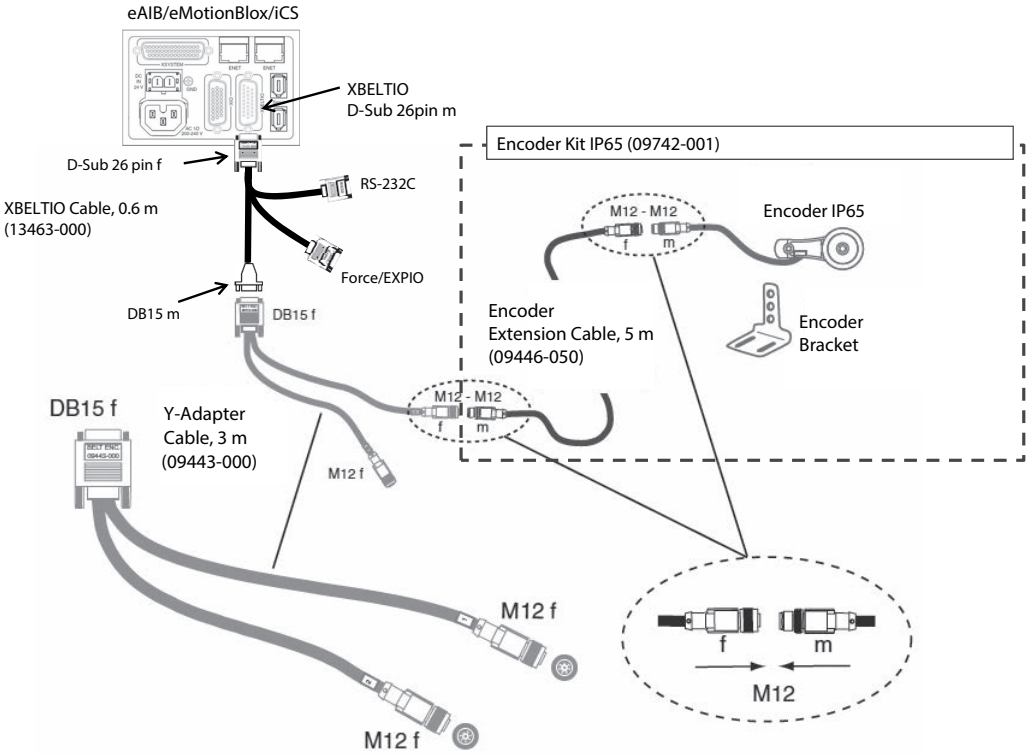

DOWNLOADED FROM SCATTS.CO.UK

DOWNLOADED FROM SCATTS.CO.UK

Connecting additional I/O options

■Connecting IO Blox (8 inputs, 8 outputs) to increase I/O ports

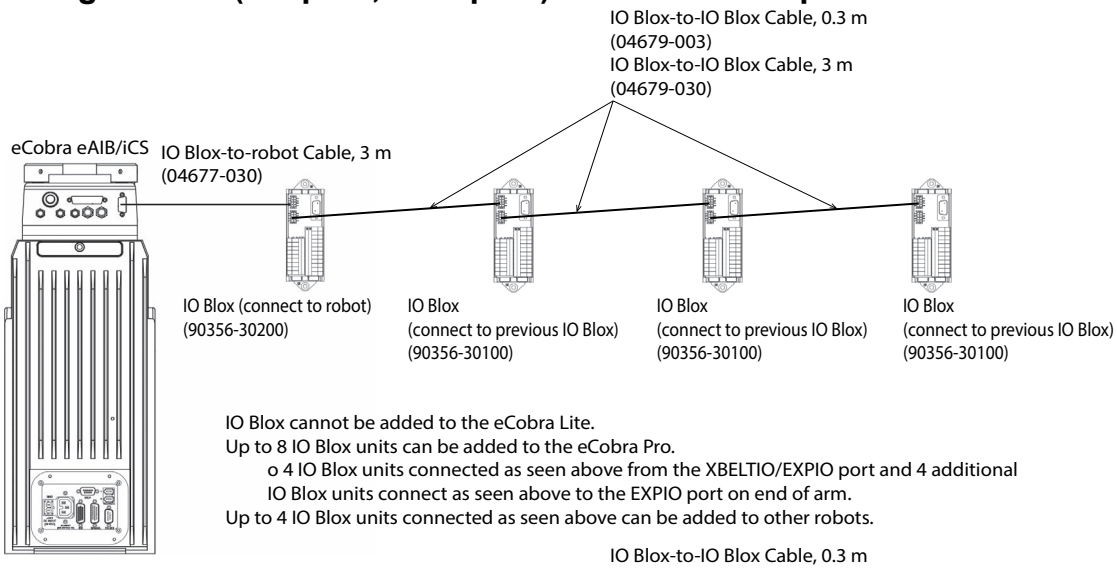

IO Blox cannot be added to the eCobra Lite.
Up to 8 IO Blox units can be added to the eCobra Pro.
o 4 IO Blox units connected as seen above from the XBELTIO/EXPIO port and 4 additional IO Blox units connect as seen above to the EXPIO port on end of arm.
Up to 4 IO Blox units connected as seen above can be added to other robots.

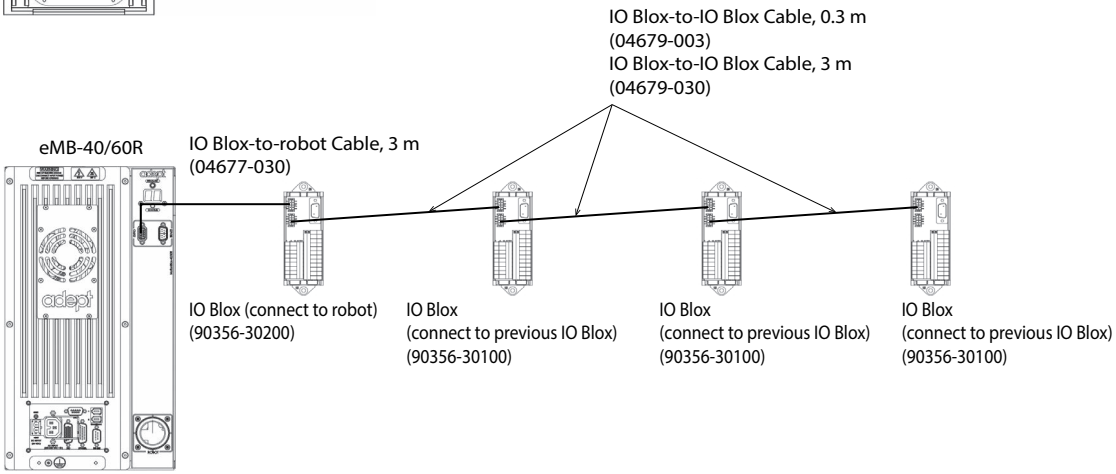

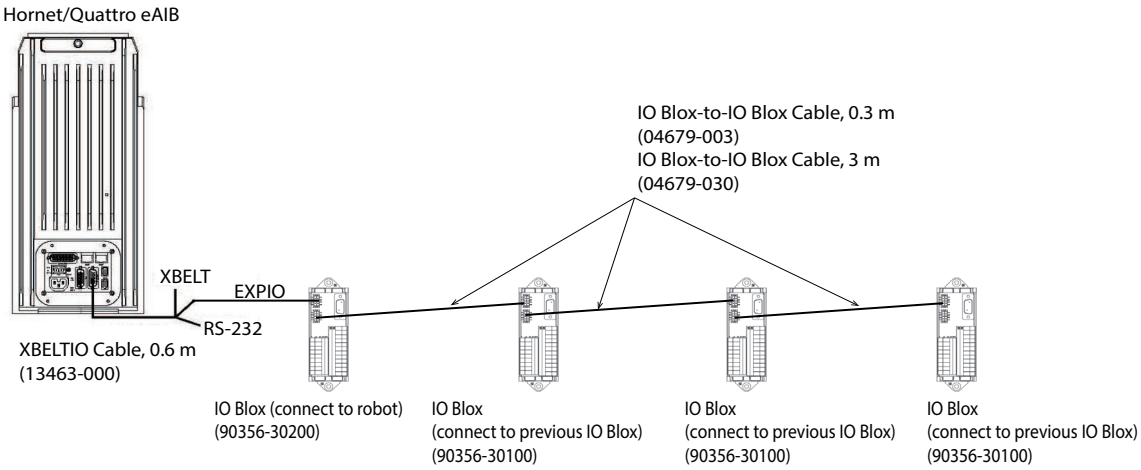

■Connecting XIO (12 inputs, 8 outputs) to increase I/O ports

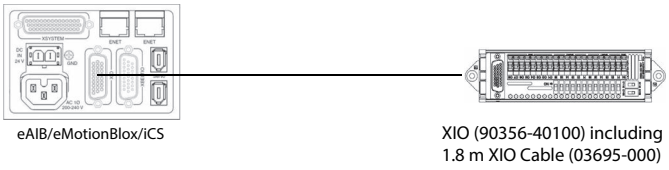

DOWNLOADED FROM SCATTS.CO.UK

DOWNLOADED FROM SCATTS.CO.UK

Ordering Information

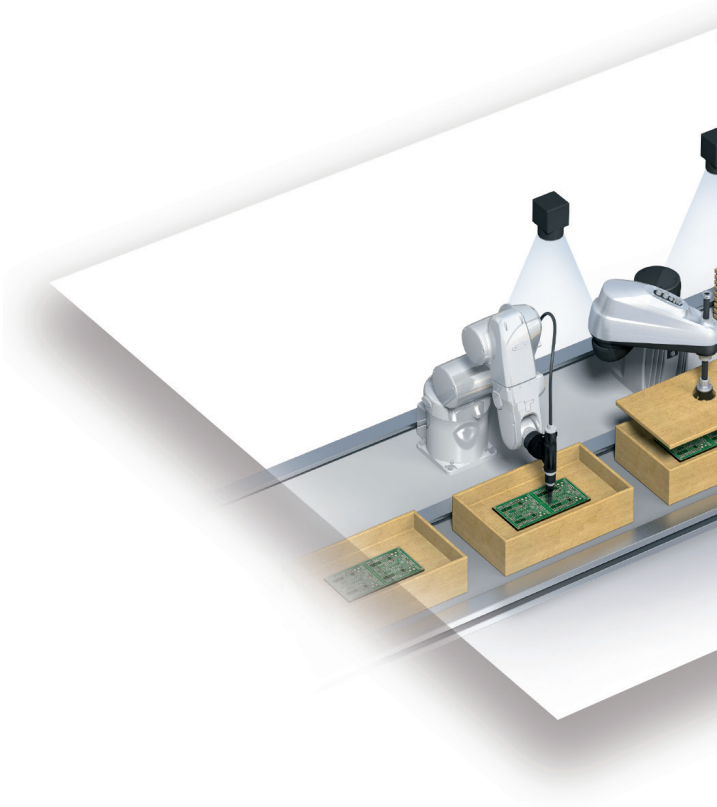

DOWNLOADED FROM SCATTS.CO.UK

DOWNLOADED FROM SCATTS.CO.UK

DOWNLOADED FROM SCATTS.CO.UK

DOWNLOADED FROM SCATTS.CO.UK

Ordering Information

Parallel Robots

Part Number Structure

iX3 Robots with EtherCAT

R X3-2 0 6 5 6 0 0
(1) (2) (3) (4) (5) (6) (7) (8)

No.	Item	Symbol	Specifications
(1)	Industrial Robots		
(2)	Family	X3	iX3
(3)	Performance	2	Default
(4)	Version	0	
(5)	Configuration	6	with iCS-ECAT
(6)	Size	56	565mm
(7)	Type	0	Standard
		1	IP65
(8)	Options	0	3-Axis
		4	4-Axis

Part Number List

Type	Part Number
iX3-565, 3 Axis, iCS-ECAT	RX3-2065600
iX3-565, 4 Axis, iCS-ECAT	RX3-2065604
iX3-565, 3 Axis, IP65, iCS-ECAT	RX3-2065610
iX3-565, 4 Axis, IP65, iCS-ECAT	RX3-2065614

iX4 Robots with EtherCAT

R X4-2 1 6 6 0 0 0
(1) (2) (3) (4) (5) (6) (7) (8)

No.	Item	Symbol	Specifications
(1)	Industrial Robots		
(2)	Family	X4	iX4
(3)	Performance	2	Default
(4)	Version	1	
(5)	Configuration	2	with iCS-ECAT
(6)	Size	60	650mm
		63	800mm
(7)	Type	0	Standard (H)
		1	HS
		2	IP65
(8)	Platform Options	0	P30
		1	P31
		2	P32
		4	P34

Part Number List

Type	Part Number
iX4-650H, P30, iCS-ECAT	RX4-2166000
iX4-650H, P31, iCS-ECAT	RX4-2166001
iX4-650H, P32, iCS-ECAT	RX4-2166002
iX4-650H, P34, iCS-ECAT	RX4-2166004
iX4-650HS, USDA, P30, iCS-ECAT	RX4-2166010
iX4-650HS, USDA, P31, iCS-ECAT	RX4-2166011
iX4-650HS, USDA, P32, iCS-ECAT	RX4-2166012
iX4-650HS, USDA, P34, iCS-ECAT	RX4-2166014
iX4-650H, IP65, P30, iCS-ECAT	RX4-2166020
iX4-650H, IP65, P31, iCS-ECAT	RX4-2166021
iX4-650H, IP65, P32, iCS-ECAT	RX4-2166022
iX4-650H, IP65, P34, iCS-ECAT	RX4-2166024
iX4-800H, P30, iCS-ECAT	RX4-2166300
iX4-800H, P31, iCS-ECAT	RX4-2166301
iX4-800H, P32, iCS-ECAT	RX4-2166302
iX4-800H, P34, iCS-ECAT	RX4-2166304
iX4-800HS, USDA, P30, iCS-ECAT	RX4-2166310
iX4-800HS, USDA, P31, iCS-ECAT	RX4-2166311
iX4-800HS, USDA, P32, iCS-ECAT	RX4-2166312
iX4-800HS, USDA, P34, iCS-ECAT	RX4-2166314
iX4-800H, IP65, P30, iCS-ECAT	RX4-2166320
iX4-800H, IP65, P31, iCS-ECAT	RX4-2166321
iX4-800H, IP65, P32, iCS-ECAT	RX4-2166322
iX4-800H, IP65, P34, iCS-ECAT	RX4-2166324

Note: The purpose of this part number structure is to provide understanding of the meaning of specifications from the part number. Part numbers are not available for all combinations of code numbers.

DOWNLOADED FROM SCATTS.CO.UK

DOWNLOADED FROM SCATTS.CO.UK

Parallel Robots

Part Number Structure

Hornet

17 2 0 1 - 4 56 0 0

(1) (2) (3) (4) (5) (6) (7) (8)

No.	Item	Symbol	Specifications
(1)	Industrial Robots		
(2)	Performance level	2	Pro
(3)	Version	0	
(4)	Configuration	1	Standard
		3	Add-On
(5)	Robot type	4	Hornet
(6)	Size	56	565 mm
(7)	Cleanroom/IP rating	0	Standard
		1	IP65/67
(8)	Options	0	3
		4	4

Quattro

17 2 1 4 - 2 60 0 0

(1) (2) (3) (4) (5) (6) (7) (8)

No.	Item	Symbol	Specifications
(1)	Industrial Robots		
(2)	Performance level	2	Pro
(3)	Version	1	
(4)	Configuration	3	Add-On
		4	with EX Controller
(5)	Robot type	2	Quattro
(6)	Size	60	650 mm
		63	800 mm
(7)	Cleanroom/IP rating /HS	0	Standard
		1	HS
		2	IP65/67
(8)	Options	0	P30
		1	P31
		2	P32
		4	P34

Part Number List

Type	Part Number
Hornet 565 4Axis	17201-45604
Hornet 565 3Axis	17201-45600
Hornet 565 4Axis IP65/67	17201-45614
Hornet 565 3Axis IP65/67	17201-45610
Hornet 565 4Axis Add-On	17203-45604
Hornet 565 3Axis Add-On	17203-45600
Hornet 565 4Axis IP65/67 Add-On	17203-45614
Hornet 565 3Axis IP65/67 Add-On	17203-45610
Quattro 650H P30	17214-26000
Quattro 650H P31	17214-26001
Quattro 650H P32	17214-26002
Quattro 650H P34	17214-26004
Quattro 650H P30 IP65/67	17214-26020
Quattro 650H P31 IP65/67	17214-26021
Quattro 650H P32 IP65/67	17214-26022
Quattro 650H P34 IP65/67	17214-26024
Quattro 650HS P30	17214-26010
Quattro 650HS P31	17214-26011
Quattro 650HS P32	17214-26012
Quattro 650HS P34	17214-26014
Quattro 800H P30	17214-26300
Quattro 800H P31	17214-26301
Quattro 800H P32	17214-26302
Quattro 800H P34	17214-26304
Quattro 800HS P30	17214-26310
Quattro 800HS P31	17214-26311
Quattro 800HS P32	17214-26312
Quattro 800HS P34	17214-26314

Part Number List

Type	Part Number
Quattro 800H P30 IP65/67	17214-26320
Quattro 800H P31 IP65/67	17214-26321
Quattro 800H P32 IP65/67	17214-26322
Quattro 800H P34 IP65/67	17214-26324
Quattro 650H P30 Add-On	17213-26000
Quattro 650H P31 Add-On	17213-26001
Quattro 650H P32 Add-On	17213-26002
Quattro 650H P34 Add-On	17213-26004
Quattro 650HS P30 Add-On	17213-26010
Quattro 650HS P31 Add-On	17213-26011
Quattro 650HS P32 Add-On	17213-26012
Quattro 650HS P34 Add-On	17213-26014
Quattro 650H P30 IP65/67 Add-On	17213-26020
Quattro 650H P31 IP65/67 Add-On	17213-26021
Quattro 650H P32 IP65/67 Add-On	17213-26022
Quattro 650H P34 IP65/67 Add-On	17213-26024
Quattro 800H P30 Add-On	17213-26300
Quattro 800H P31 Add-On	17213-26301
Quattro 800H P32 Add-On	17213-26302
Quattro 800H P34 Add-On	17213-26304
Quattro 800HS P30 Add-On	17213-26310
Quattro 800HS P31 Add-On	17213-26311
Quattro 800HS P32 Add-On	17213-26312
Quattro 800HS P34 Add-On	17213-26314
Quattro 800H P30 IP65/67 Add-On	17213-26320
Quattro 800H P31 IP65/67 Add-On	17213-26321
Quattro 800H P32 IP65/67 Add-On	17213-26322
Quattro 800H P34 IP65/67 Add-On	17213-26324

DOWNLOADED FROM SCATTS.CO.UK

DOWNLOADED FROM SCATTS.CO.UK

Parallel Robots

Part Number Structure

i4H Robot with EtherCAT

R S4 - 2 0 6 6 5 0 2

(1) (2) (3) (4) (5) (6) (7) (8) (9)

No.	Item	Symbol	Specifications
(1)	Industrial Robots		
(2)	Family	S4	i4
(3)	Performance Level	2	Default
(4)	Version	0	
(5)	Configuration	6	with iCS-ECAT
(6)	Size	6	650mm
		7	750mm
		8	850mm
(7)	Type	5	Standard
		7	Inverted
(9)	Quill Length	2	210mm
		4	410mm

Part Number List

Type	Part Number
i4-650H Standard with iCS-ECAT	RS4-2066502
i4-650H Standard, Long Quill (410mm) with iCS-ECAT	RS4-2066504
i4-650H Inverted with iCS-ECAT	RS4-2066702
i4-650H Inverted, Long Quill (410mm) with iCS-ECAT	RS4-2066704
i4-750H Standard with iCS-ECAT	RS4-2067502
i4-750H Standard, Long Quill (410mm) with iCS-ECAT	RS4-2067504
i4-750H Inverted with iCS-ECAT	RS4-2067702
i4-750H Inverted, Long Quill (410mm) with iCS-ECAT	RS4-2067704
i4-850H Standard with iCS-ECAT	RS4-2068502
i4-850H Standard, Long Quill (410mm) with iCS-ECAT	RS4-2068504
i4-850H Inverted with iCS-ECAT	RS4-2068702
i4-850H Inverted, Long Quill (410mm) with iCS-ECAT	RS4-2068704

eCobra 600/800 Robot with EtherCAT

R L4 - 1 1 6 60 0 0

(1) (2) (3) (4) (5) (6) (7) (8)

No.	Item	Symbol	Specifications
(1)	Industrial Robots		
(2)	Family	L4	eCobra
(3)	Performance Level	1	Standard
		2	Pro
(4)	Version	1	
(5)	Configuration	6	with iCS-ECAT
(6)	Size	60	600 mm
		80	800 mm
(7)	Cleanroom/IP rating	0	Standard
		1	Class 10
		3	IP 65 (not available for 600)
(8)	Options	0	None

Part Number List

Type	Part Number
eCobra 600 Standard with iCS-ECAT	RL4-1166000
eCobra 600 Standard Cleanroom with iCS-ECAT	RL4-1166010
eCobra 600 Pro with iCS-ECAT	RL4-2166000
eCobra 600 Pro Cleanroom with iCS-ECAT	RL4-2166010
eCobra 800 Standard Cleanroom with iCS-ECAT	RL4-1168000
eCobra 800 Standard IP65 with iCS-ECAT	RL4-1168010
eCobra 800 Pro with iCS-ECAT	RL4-1168030
eCobra 800 Pro Cleanroom with iCS-ECAT	RL4-2168000
eCobra 800 Pro IP65 with iCS-ECAT	RL4-2168010

Note: The purpose of this part number structure is to provide understanding of the meaning of specifications from the part number. Part numbers are not available for all combinations of code numbers.

DOWNLOADED FROM SCATTS.CO.UK

DOWNLOADED FROM SCATTS.CO.UK

SCARA Robots

Part Number Structure

Cobra 450/500/650

17 2 0 1 - 1 45 0 0

(1) (2) (3) (4) (5) (6) (7) (8)

No.	Item	Symbol	Specifications
(1)	Industrial Robots		
(2)	Performance level	2	Pro
(3)	Version	0	
(4)	Configuration	1	Standard
		3	Add-On
(5)	Robot type	1	Cobra
(6)	Size	45	450 mm
		50	500 mm
		65	650 mm
(7)	Cleanroom/IP rating	0	Standard
(8)	Options	0	None

Part Number List

Type	Part Number
Cobra 450	17201-14500
Cobra 500	17201-15000
Cobra 650	17201-16500
eCobra 600 Lite	17010-16000
eCobra 600 Standard	17111-16000
eCobra 600 Pro	17211-16000
eCobra 600 Lite Cleanroom	17010-16010
eCobra 600 Standard Cleanroom	17111-16010
eCobra 600 Pro Cleanroom	17211-16010
eCobra 800 Lite	17010-18000
eCobra 800 Standard	17111-18000
eCobra 800 Pro	17211-18000
eCobra 800 Lite Cleanroom	17010-18010
eCobra 800 Standard Cleanroom	17111-18010
eCobra 800 Pro Cleanroom	17211-18010
eCobra 800 Lite IP65	17010-18030
eCobra 800 Standard IP65	17111-18030
eCobra 800 Pro IP65	17211-18030
eCobra 800 Inverted Lite	17010-18400
eCobra 800 Inverted Standard	17111-18400
eCobra 800 Inverted Pro	17211-18400
eCobra 800 Inverted Lite Cleanroom	17010-18410
eCobra 800 Inverted Standard Cleanroom	17111-18410
eCobra 800 Inverted Pro Cleanroom	17211-18410
eCobra 800 Inverted Lite IP65	17010-18430
eCobra 800 Inverted Standard IP65	17111-18430
eCobra 800 Inverted Pro IP65	17211-18430

eCobra 600/800/800Inverted

17 0 1 0 - 1 60 0 0

(1) (2) (3) (4) (5) (6) (7) (8)

No.	Item	Symbol	Specifications
(1)	Industrial Robots		
(2)	Performance level	0	Lite
		1	Standard
		2	Pro
(3)	Version	1	
(4)	Configuration	0	ePLC not supported
		1	Standard
		3	Add-On
(5)	Robot type	1	eCobra
(6)	Size	60	600 mm
		80	800 mm
		84	800 mm Inverted
(7)	Cleanroom/IP rating	0	Standard
		1	Class 10
		3	IP65 (not available for 600 mm)
(8)	Options	0	None

Part Number List

Type	Part Number
Cobra 450 Add-On	17203-14500
Cobra 500 Add-On	17203-15000
Cobra 650 Add-On	17203-16500
eCobra 600 Standard Add-On	17113-16000
eCobra 600 Pro Add-On	17213-16000
eCobra 600 Standard Cleanroom Add-On	17113-16010
eCobra 600 Pro Cleanroom Add-On	17213-16010
eCobra 800 Standard Add-On	17113-18000
eCobra 800 Pro Add-On	17213-18000
eCobra 800 Standard Cleanroom Add-On	17113-18010
eCobra 800 Pro Cleanroom Add-On	17213-18010
eCobra 800 Standard IP65 Add-On	17113-18030
eCobra 800 Pro IP65 Add-On	17213-18030
eCobra 800 Inverted Standard Add-On	17113-18400
eCobra 800 Inverted Pro Add-On	17213-18400
eCobra 800 Inverted Standard Cleanroom Add-On	17113-18410
eCobra 800 Inverted Pro Cleanroom Add-On	17213-18410
eCobra 800 Inverted Standard IP65 Add-On	17113-18430
eCobra 800 Inverted Pro IP65 Add-On	17213-18430

Note: The purpose of this part number structure is to provide understanding of the meaning of specifications from the part number. Part numbers are not available for all combinations of code numbers.

DOWNLOADED FROM SCATTS.CO.UK

DOWNLOADED FROM SCATTS.CO.UK

SCARA Robots

Part Number Structure

i4L Robot with ENET

R S4 - 2 0 5 3 0 0 2

(1) (2) (3) (4) (5) (6) (7) (8) (9)

No.	Item	Symbol	Specifications
(1)	Industrial Robots		
(2)	Family	S4	i4L
(3)	Performance Level	2	Default
(4)	Version	0	
(5)	Configuration	5	with iCS-ENET
(6)	Size	3	350mm
		4	450mm
		5	550mm
(7)	Interface Panel Orientation	0	Rear
		1	Bottom
(9)	Quill Length	2	180mm
		4	350mm

Part Number List

Type	Part Number
i4-350L Rear Panel with iCS ENET	RS4-2053002
i4-450L Rear Panel with iCS ENET	RS4-2054002
i4-550L Rear Panel with iCS ENET	RS4-2055002
i4-550L 350mm-Z Rear Panel with iCS ENET	RS4-2055004
i4-350L Bottom Panel with iCS ENET	RS4-2053102
i4-450L Bottom Panel with iCS ENET	RS4-2054102
i4-550L Bottom Panel with iCS ENET	RS4-2055102
i4-550L 350mm-Z Bottom Panel with iCS ENET	RS4-2055104

Note: The purpose of this part number structure is to provide understanding of the meaning of specifications from the part number. Part numbers are not available for all combinations of code numbers.

DOWNLOADED FROM SCATTS.CO.UK

DOWNLOADED FROM SCATTS.CO.UK

Articulated Robots

Part Number Structure

Viper 650/850 Robot with EtherCAT

R L6 - 2 0 6 60 0 0

(1) (2) (3) (4) (5) (6) (7) (8)

No.	Item	Symbol	Specifications
(1)	Industrial Robots		
(2)	Family	L6	Viper
(3)	Performance Level	2	Performance (Default 2 for Viper Robots)
(4)	Version	0	
(5)	Configuration	6	with eCS-ECAT
(6)	Size	60	650 mm
		80	850 mm
(7)	Cleanroom/IP rating	0	Standard
		1	IP54/65
		2	Class10
(8)	Options	0	None

Viper

17 2 0 1 - 3 60 0 0

(1) (2) (3) (4) (5) (6) (7) (8)

No.	Item	Symbol	Specifications
(1)	Industrial Robots		
(2)	Performance level	2	Pro
(3)	Version	2	Performance (Default 2 for Viper Robots)
(4)	Configuration	0	
		6	with eCS-ECAT
(5)	Robot type	3	Viper
(6)	Size	60	650 mm
		80	850 mm
		84	850 mm Inverted
(7)	Cleanroom/IP rating	0	Standard
		1	IP54/65
		2	Class 10
(8)	Options	0	None

Part Number List

Type	Part Number
Viper 650 with eCS-ECAT	RL6-2066000
Viper 650 IP54/65 with eCS-ECAT	RL6-2066010
Viper 650 Cleanroom with eCS-ECAT	RL4-2166000
Viper 850 with eCS-ECAT	RL6-2068000
Viper 850 IP54/65 with eCS-ECAT	RL62068010
Viper 850 Cleanroom with eCS-ECAT	RL4-1168010

Part Number List

Type	Part Number
Viper 650	17201-36000
Viper 650 Cleanroom	17201-36020
Viper 650 IP54/65	17201-36010
Viper 850	17201-38000
Viper 850 Cleanroom	17201-38020
Viper 850 IP54/65	17201-38010
Viper 650 Add-On	17203-36000
Viper 650 Cleanroom Add-On	17203-36020
Viper 650 IP54/65 Add-On	17203-36010
Viper 850 Add-On	17203-38000
Viper 850 Cleanroom Add-On	17203-38020
Viper 850 IP54/65 Add-On	17203-38010

Note: The purpose of this part number structure is to provide understanding of the meaning of specifications from the part number. Part numbers are not available for all combinations of code numbers.

DOWNLOADED FROM SCATTS.CO.UK

DOWNLOADED FROM SCATTS.CO.UK

Related Documentation

Cat. No.	Manual
I590	Robot Safety Guide
I593	eCobra 600, 800, and 800 Inverted Robots User's Guide
I594	eCobra 600, 800, and 800 Inverted Robots ePLC Quick Setup Guide
I595	Hornet 565 Robot Quick Setup Guide
I596	Hornet 565 Robot User's Guide
I597	Quattro 650H/650HS/800H/800HS User's Guide
I598	Quattro 650H/650HS/800H/800HS ePLC Quick Setup Guide
I599	Viper 650/850 Robot with eMB-60R User's Guide
I600	Viper 650/850 ePLC Quick Setup Guide
I601	T20 Pendant User's Guide
I602	SmartController EX user's guide
I603	ACE User's Guide
I604	eV+ Language User's Guide
I605	eV+ Language Reference Guide
I606	eV+ Operating System User's Guide
I607	eV+ Operating System Reference Guide
I608	SmartVision MX User's Guide
I609	ACE Sight Reference Guide
I632	IPC Application Controller User’s Manual
I633	Automation Control Environment(ACE) Version4 User's Manual
I651	eV+3 User's Manual
I652	eV+3 Keyword Reference Manual
I653	eCobra 600 and 800 with iCS-ECAT User’s Manual
I654	Viper 650 and 850 with eCS-eCS-ECAT User’s Manual
I658	i4L Robot User’s Manual
I661	i4H Robot with EtherCAT User’s Manual
I655	iX3 565 Robot with EtherCAT User’s Manual
I656	iX4 650 H/HS and 800 H/HS Robot with EtherCAT User’s Manual
I832	Cobra 450, 500, and 650 Robot User’s Guide
O037	NJ-series Robot Integrated CPU Unit User’s Manual
O049	NJ-series Robot Integrated System Startup Guide
W595	Sysmac Studio Integrated Robot System Conrtol Function Operation Manual

DOWNLOADED FROM SCATTS.CO.UK

DOWNLOADED FROM SCATTS.CO.UK

Note: Do not use this document to operate the Unit.

OMRON Corporation **Industrial Automation Company**
Kyoto, JAPAN
Contact: www.ia.omron.com

Regional Headquarters
OMRON EUROPE B.V.
Wegalaan 67-69, 2132 JD Hoofddorp
The Netherlands
Tel: (31)2356-81-300/Fax: (31)2356-81-388

OMRON ASIA PACIFIC PTE. LTD.
No. 438A Alexandra Road # 05-05/08 (Lobby 2),
Alexandra Technopark,
Singapore 119967
Tel: (65) 6835-3011/Fax: (65) 6835-2711

OMRON ELECTRONICS LLC
2895 Greenspoint Parkway, Suite 200 Hoffman Estates,
IL 60169 U.S.A.
Tel: (1) 847-843-7900/Fax: (1) 847-843-7787

OMRON ROBOTICS AND SAFETY TECHNOLOGIES, INC.
4225 Hacienda Dr., Pleasanton, CA 94588 U.S.A.
Tel: (1) 925-245-3400/Fax: (1) 925-960-0590

OMRON (CHINA) CO., LTD.
Room 2211, Bank of China Tower, 200 Yin Cheng Zhong Road,
PuDong New Area, Shanghai, 200120, China
Tel: (86) 21-5037-2222/Fax: (86) 21-5037-2200

Authorized Distributor:

© OMRON Corporation 2021. All Rights Reserved.
In the interest of product improvement,
specifications are subject to change without notice.

Cat. No. I822-E1-15 0321(0920)

DOWNLOADED FROM SCATTS.CO.UK

SCATTERGOOD & JOHNSON LTD
ELECTRICAL ENGINEERING & FLUID CONTROL DISTRIBUTORS
Est.1899

At Scattergood & Johnson Ltd, we pride ourselves on being a technical distributor to specialist industries.

Working with a range of quality product suppliers across a number of specialist markets, we are not your average 'box shifter' - we are your technical and supply chain partner.

We fully support every product we sell - for free! Our internal team and external sales engineers can answer any product or application question, no matter the complexity.

Backing up this technical ability is a range of 50,000+ products available from stock for nationwide next day delivery (same day if required!), or you can collect what you need from any of our trade counters around the UK.

Select your specialist interest below to learn more about how we can help.

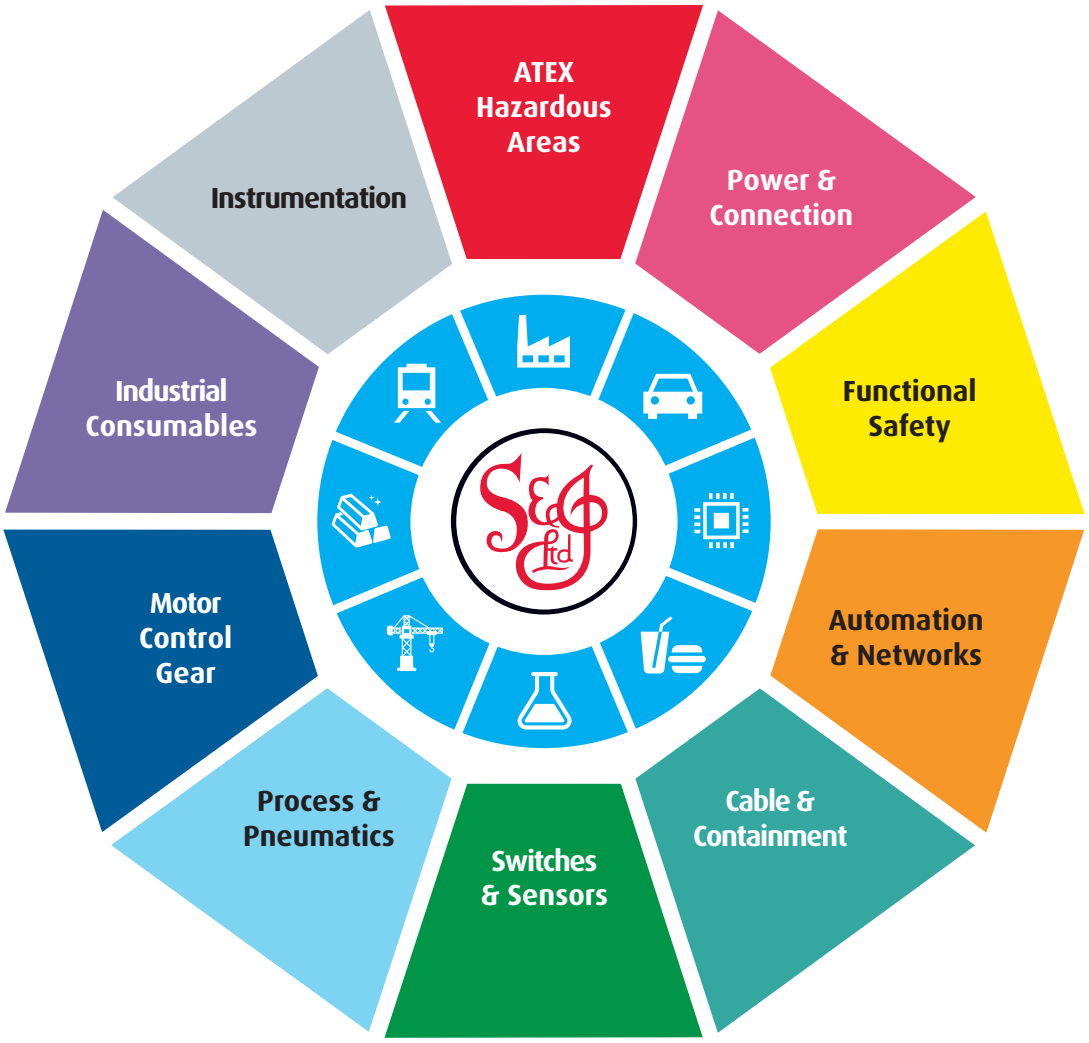

Online, In Branch and On the Road - Scattergood & Johnson Ltd, there when you need us.

www.scatts.co.uk