DOWNLOADED FROM SCATTS.CO.UK

52104310	DATA SHEET	LAPP
Valid from: 13.06.2019	SKINDICHT® MR-M	

The SKINDICHT® MR-M reducers enable the use of cable glands which outer thread is smaller than the already existing thread borings in machines, devices and housings.

Technical features:

Material	Brass, nickel-plated (external thread M16x1.5 up to M72x2)
	Brass, bright (internal thread M80x2)
O-ring (optional)	NBR
External thread	M16x1.5 up to M80x2 acc. to EN 60423
Internal thread	M12x1.5 up to M75x1,5 acc. to EN 60423
Temperature range	-60°C up to +200°C

Norm references:

CE

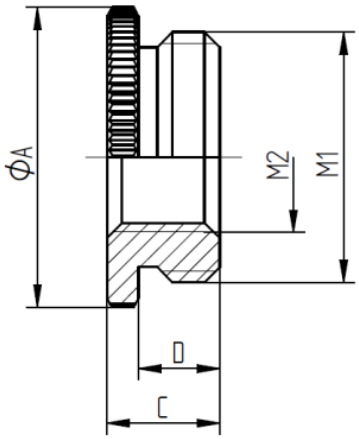

We reserve all rights according to DIN ISO 16016.
PD 0019/05_04.18EN

DOWNLOADED FROM SCATTS.CO.UK

DOWNLOADED FROM SCATTS.CO.UK

SKINDICHT® MR-M

External thread M1	Internal thread M2	Diameter Ø A mm	High C mm	High D mm	Article No.
M16x1,5	M12x1,5	20	8,5	6	52104310
M20x1,5	M12x1,5	24	9	6,5	52104311
M20x1,5	M16x1,5	24	9	6,5	52104312
M25x1,5	M16x1,5	30	10	7	52104313
M25x1,5	M20x1,5	30	10	7	52104314
M32x1,5	M20x1,5	37	11,5	8	52104315
M32x1,5	M25x1,5	37	11,5	8	52104316
M40x1,5	M25x1,5	46	12,5	9	52104317
M40x1,5	M32x1,5	46	12,5	9	52104318
M50x1,5	M32x1,5	56	14	10	52104319
M50x1,5	M40x1,5	56	14	10	52104320
M63x1,5	M40x1,5	68	14	10	52104321
M63x1,5	M50x1,5	68	14	10	52104322
M72x2	M63x1,5	78	19	12	52006575
M80x2	M75x1,5	86	19	12	52006579

SKINDICHT® MR-M with o-ring

External thread M1	Internal thread M2	Diameter Ø A mm	High C mm	High D mm	Article No.
M16x1,5	M12x1,5	20	8,5	6	52104409
M20x1,5	M12x1,5	24	9	6,5	52104411
M20x1,5	M16x1,5	24	9	6,5	52104412
M25x1,5	M16x1,5	30	10	7	52104413
M25x1,5	M20x1,5	30	10	7	52104414
M32x1,5	M20x1,5	37	11,5	8	52104419
M32x1,5	M25x1,5	37	11,5	8	52104416
M40x1,5	M25x1,5	46	12,5	9	52104417
M40x1,5	M32x1,5	46	12,5	9	52104418
M50x1,5	M32x1,5	56	14	10	52104421
M50x1,5	M40x1,5	56	14	10	52104422
M63x1,5	M40x1,5	68	14	10	52104423
M63x1,5	M50x1,5	68	14	10	52104424

For more information please see our current catalogue. Please do not hesitate to contact our laboratory if there are any questions regarding resistance against aggressive agents and special oil.

We reserve all rights according to DIN ISO 16016.
PD 0019/05_04.18EN

DOWNLOADED FROM SCATTS.CO.UK

SCATTERGOOD & JOHNSON LTD
ELECTRICAL ENGINEERING & FLUID CONTROL DISTRIBUTORS
Est.1899

At Scattergood & Johnson Ltd, we pride ourselves on being a technical distributor to specialist industries.

Working with a range of quality product suppliers across a number of specialist markets, we are not your average 'box shifter' - we are your technical and supply chain partner.

We fully support every product we sell - for free! Our internal team and external sales engineers can answer any product or application question, no matter the complexity.

Backing up this technical ability is a range of 50,000+ products available from stock for nationwide next day delivery (same day if required!), or you can collect what you need from any of our trade counters around the UK.

Select your specialist interest below to learn more about how we can help.

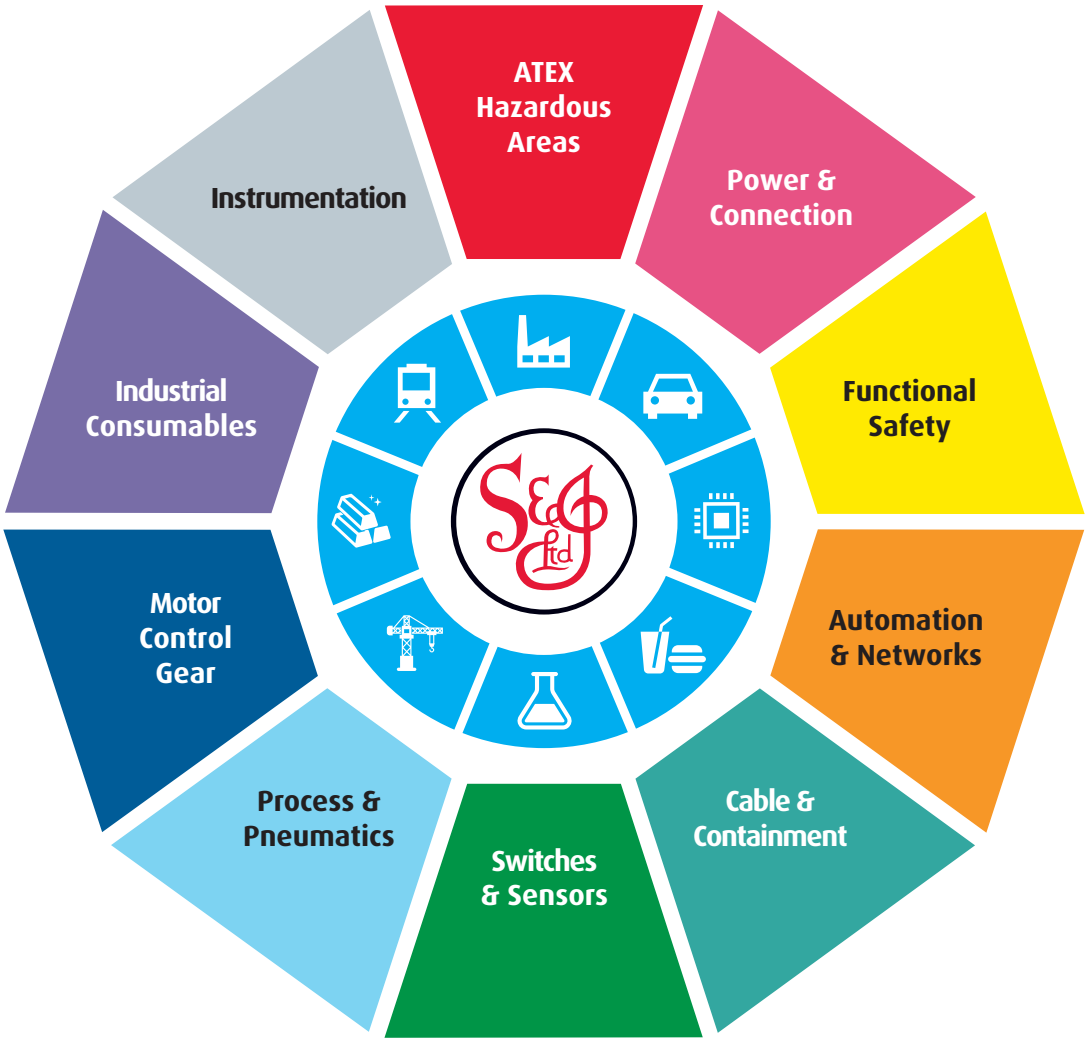

Online, In Branch and On the Road - Scattergood & Johnson Ltd, there when you need us.

www.scatts.co.uk