DOWNLOADED FROM SCATTS.CO.UK

52103000	DATA SHEET	LAPP
Valid from: 30.07.2020	SKINDICHT® SM-M	

The SKINDICHT® SM-M is a hexagonal brass counter nut with metric thread. Counter brass nuts are required in cases if glands have to be countered or thin housings allow only through borings.

Technical features:

Material	Brass, nickel-plated Lead free Brass, nickel plated
Sizes	M12x1.5 up to M110x2 acc. to DIN EN 60423
Temperature range	-60°C up to +200°C

Norm references:

CE

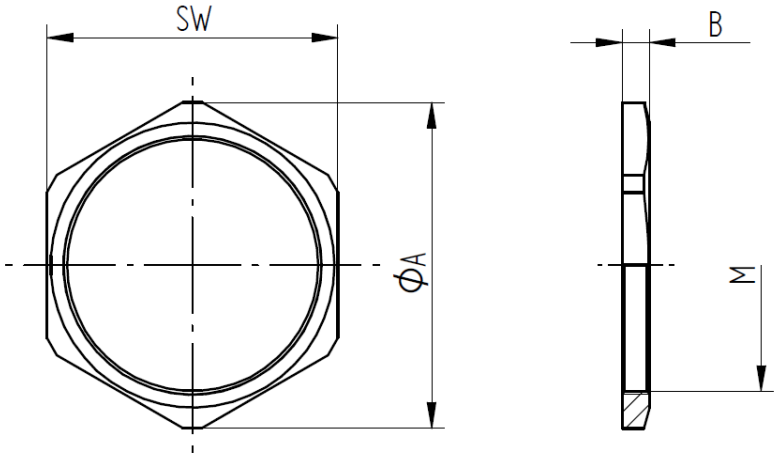

Thread M	Wrench Size SW mm	Diameter Ø A mm	Thickness B mm	Art. No.	
				Brass	Lead free Brass
M12x1,5	15	16,5	3	52103000	52103000LF
M16x1,5	19	20,9	3	52103010	52103010LF
M20x1,5	24	26,4	3,5	52103020	52103020LF
M25x1,5	30	33	4	52103030	52103030LF
M32x1,5	36	39,6	4	52103040	52103040LF
M40x1,5	46	50,6	5	52103050	52103050LF
M50x1,5	60	65	5	52103060	52103060LF
M63x1,5	70	77	5	52103070	52103070LF
M75x1,5	85	95	8	52103071	-
M90x2	102	114	10	52103072	-
M110x2	124	135	12	52103073	-

For more information please see our current catalogue. Please do not hesitate to contact our laboratory if there are any questions regarding resistance against aggressive agents and special oil.

We reserve all rights according to DIN ISO 16016.
PD 0019/05_04.18EN

DOWNLOADED FROM SCATTS.CO.UK

SCATTERGOOD & JOHNSON LTD
ELECTRICAL ENGINEERING & FLUID CONTROL DISTRIBUTORS
Est.1899

At Scattergood & Johnson Ltd, we pride ourselves on being a technical distributor to specialist industries.

Working with a range of quality product suppliers across a number of specialist markets, we are not your average 'box shifter' - we are your technical and supply chain partner.

We fully support every product we sell - for free! Our internal team and external sales engineers can answer any product or application question, no matter the complexity.

Backing up this technical ability is a range of 50,000+ products available from stock for nationwide next day delivery (same day if required!), or you can collect what you need from any of our trade counters around the UK.

Select your specialist interest below to learn more about how we can help.

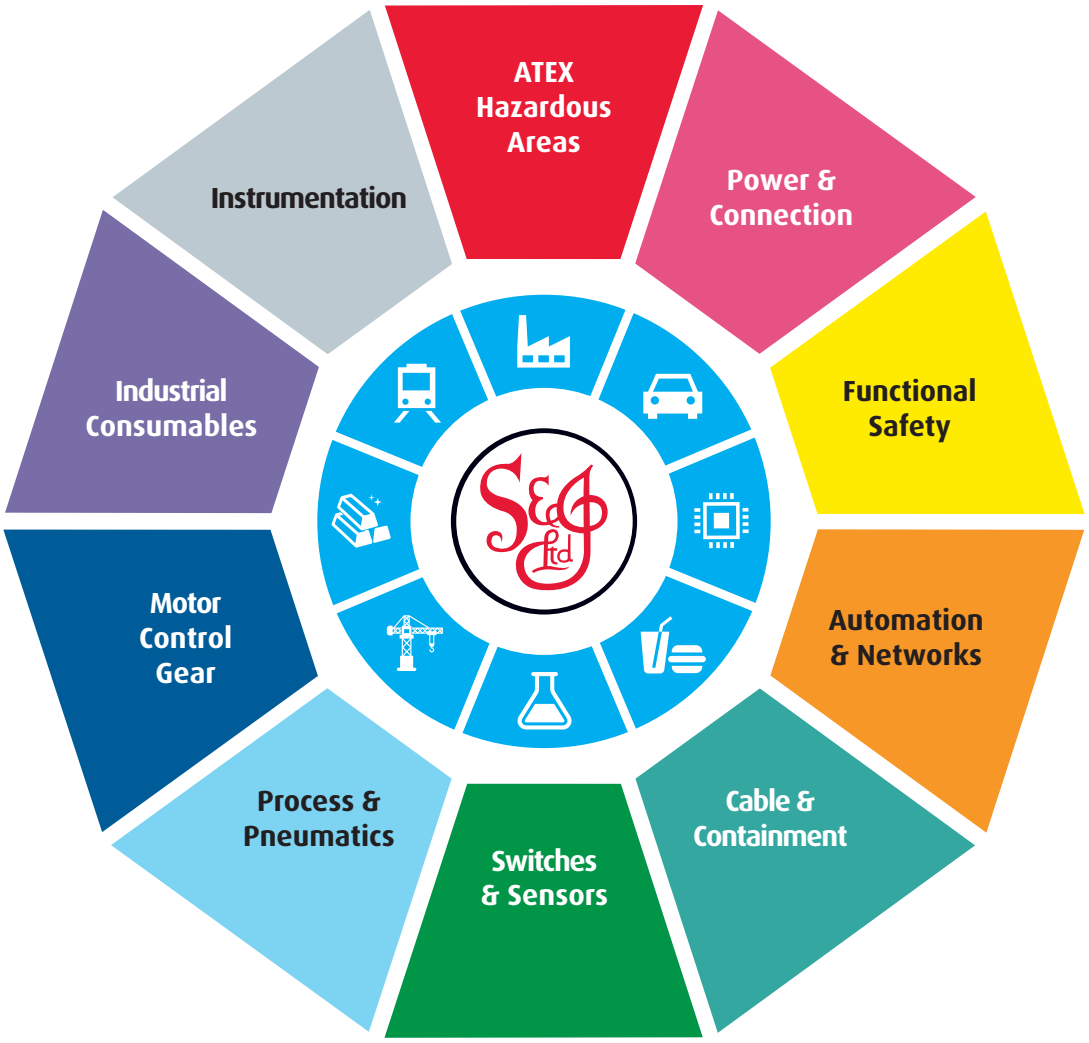

Online, In Branch and On the Road - Scattergood & Johnson Ltd, there when you need us.

www.scatts.co.uk