DOWNLOADED FROM SCATTS.CO.UK

LAPP

PRODUCT INFORMATION

SKINTOP® ST

SKINTOP® ST, increased oil-resistant polyamide cable gland with variable clamping ranges, permanent vibration protection and strain relief

- Good chemical resistance
- Wide clamping range
- Mechanical resistance
- Optimum strain relief
- Temperature-resistant
- Variety of approval certifications

Benefits

High oil-resistance for maximum reliability
Permanent vibration protection
Optimum strain relief
Wide, variable clamping ranges
Various accessories (e.g. multiple sealing inserts)

Application range

Used in areas where a lot of cables and wires need to be inserted into housings with minimum space requirements
Machine and equipment manufacturing
Photovoltaic
Automation technology

Last Update (23.02.2022)
©2022 Lapp Group - Technical changes reserved
Product Management www.lappkabel.de
You can find the current technical data in the corresponding data sheet.
PN 0456 / 02_03.16

DOWNLOADED FROM SCATTS.CO.UK

DOWNLOADED FROM SCATTS.CO.UK

SKINTOP® ST

Norm references / Approvals
UL File Nr. E79903

Product Make-up
PG connection thread acc. to DIN 40430

Technical Data

Classification ETIM 5:	ETIM 5.0 Class-ID: EC000441 ETIM 5.0 Class-Description: Cable screw gland
Classification ETIM 6:	ETIM 6.0 Class-ID: EC000441 ETIM 6.0 Class-Description: Cable screw gland
Caution:	Refer to Appendix T21 for the installation dimensions and torques
Colour delivered:	Silver grey (RAL 7001) Light grey (RAL 7035) Black (RAL 9005), UV-resistant
Material:	Body: Polyamide Seal: CR
Tests:	GGVS: TÜ.EGG.020-95
Protection rating:	IP 68 - 5 bar NEMA Type 1, 12
Temperature range:	Dynamic: -20°C to +100°C Fixed: -40°C to +100°C

Note
Photographs and graphics are not to scale and do not represent detailed images of the respective products.
Prices are net prices without VAT and surcharges. Sale to business customers only.

©2022 Lapp Group - Technical changes reserved

DOWNLOADED FROM SCATTS.CO.UK

DOWNLOADED FROM SCATTS.CO.UK

LAPP

PRODUCT INFORMATION

SKINTOP® ST

Article number	Article designation / size	Ø F mm	SW wrench size mm	Overall length C mm	Thread length D mm	Pieces / PU
SKINTOP® ST silver grey						
53015000	PG 7	2.5 - 6.5	15	32.0	7.8	100
53015010	PG 9	3.5 - 8	19	36.0	8	100
53015020	PG 11	4 - 10	22	38.0	8	100
53015030	PG 13,5	6 - 12	24	41.0	9	100
53015040	PG 16	9 - 14	27	44.0	10	50
53015050	PG 21	13 - 18	33	49.0	11	50
53015060	PG 29	14 - 25	42	56.0	10.7	25
53015070	PG 36	24 - 32	53	66.0	13.3	10
53015080	PG 42	35 - 38	60	68.0	13.4	5
53015090	PG 48	39 - 44	65	69.0	14.3	5
SKINTOP® ST black						
53015200	PG 7	2.5 - 6.5	15	32.0	7.8	100
53015210	PG 9	3.5 - 8	19	36.0	8	100
53015220	PG 11	4 - 10	22	38.0	8	100
53015230	PG 13,5	6 - 12	24	41.0	9	100
53015240	PG 16	9 - 14	27	44.0	10	50
53015250	PG 21	13 - 18	33	49.0	11	50
53015260	PG 29	14 - 25	42	56.0	10.7	25
53015270	PG 36	24 - 32	53	66.0	13.3	10
53015280	PG 42	35 - 38	60	68.0	13.4	5
53015290	PG 48	39 - 44	65	69.0	14.3	5
SKINTOP® ST light grey						
53018000	PG 7	2.5 - 6.5	15	32.0	7.8	100
53018010	PG 9	3.5 - 8	19	36.0	8	100
53018020	PG 11	4 - 10	22	38.0	8	100
53018030	PG 13,5	6 - 12	24	41.0	9	100
53018040	PG 16	9 - 14	27	44.0	10	50
53018050	PG 21	13 - 18	33	49.0	11	50
53018060	PG 29	14 - 25	42	56.0	10.7	25
53018070	PG 36	24 - 32	53	66.0	13.3	10
53018080	PG 42	35 - 38	60	68.0	13.4	5
53018090	PG 48	39 - 44	65	69.0	14.3	5

Last Update (23.02.2022)
©2022 Lapp Group - Technical changes reserved
Product Management www.lappkabel.de
You can find the current technical data in the corresponding data sheet.
PN 0456 / 02_03.16

DOWNLOADED FROM SCATTS.CO.UK

DOWNLOADED FROM SCATTS.CO.UK

SKINTOP® ST

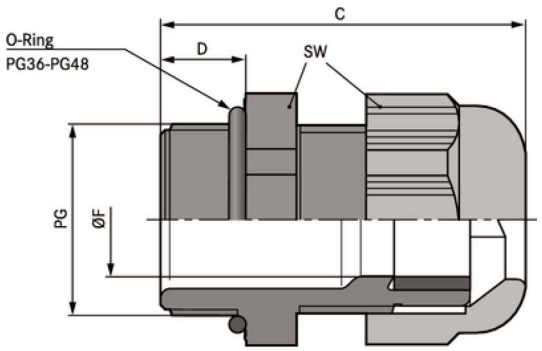

Last Update (23.02.2022)
©2022 Lapp Group - Technical changes reserved
Product Management www.lappkabel.de
You can find the current technical data in the corresponding data sheet.
PN 0456 / 02_03.16

DOWNLOADED FROM SCATTS.CO.UK

SCATTERGOOD & JOHNSON LTD
ELECTRICAL ENGINEERING & FLUID CONTROL DISTRIBUTORS
Est.1899

At Scattergood & Johnson Ltd, we pride ourselves on being a technical distributor to specialist industries.

Working with a range of quality product manufacturers across a number of specialist markets, we are not your average 'box shifter' - we are your technical and supply chain partner.

We fully support every product we sell - for free! Our internal team and external sales engineers can answer any product or application question, no matter the complexity.

Backing up this technical ability is a range of 50,000+ products available from stock for nationwide next day delivery (same day if required!), or you can collect what you need from any of our trade counters around the UK.

Select your specialist interest below to learn more about how we can help.

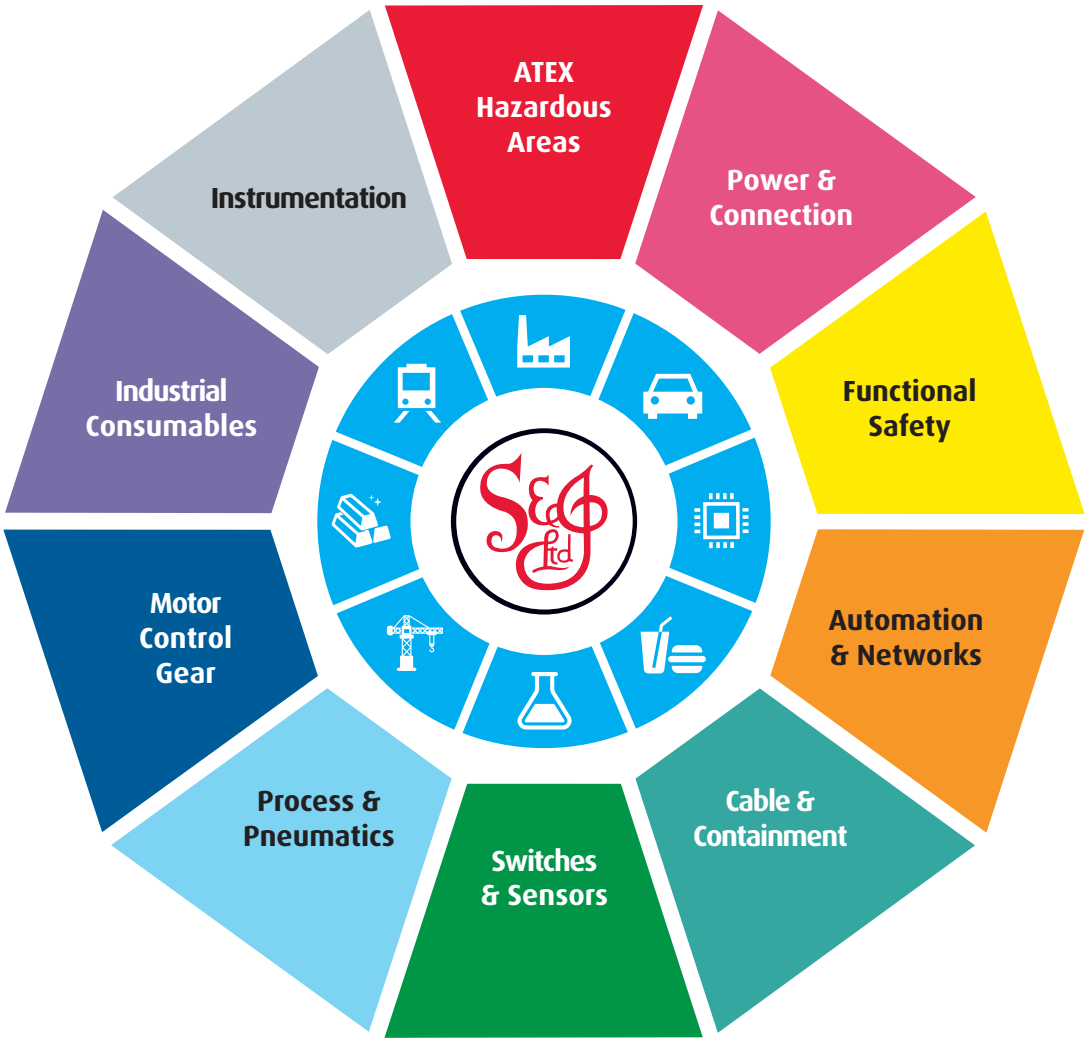

Online, In Branch and On the Road - Scattergood & Johnson Ltd, there when you need us.

www.scatts.co.uk