DOWNLOADED FROM SCATTS.CO.UK

LAPP

PRODUCT INFORMATION

SKINTOP® STR-M

SKINTOP® STR-M, increased oil-resistant plastic cable gland with permanent vibration protection and reducing seal insert

Info

With IP69 approval! Proven to withstand the most demanding cleaning procedures for industrial machinery with high-pressure cleaners and hot water!

- Wide clamping range
- Maximum vibration protection
- Mechanical resistance
- Assembly time
- Optimum strain relief
- Temperature-resistant
- Variety of approval certifications

Benefits

High oil-resistance for maximum reliability
Permanent vibration protection
Wide, variable clamping ranges
Optimum strain relief
Various accessories (e.g. multiple sealing inserts)

Last Update (28.02.2022)
©2022 Lapp Group - Technical changes reserved
Product Management www.lappkabel.de
You can find the current technical data in the corresponding data sheet.
PN 0456 / 02_03.16

DOWNLOADED FROM SCATTS.CO.UK

DOWNLOADED FROM SCATTS.CO.UK

SKINTOP® STR-M

Application range
With reducing seal insert, to seal cables with smaller outer diameters

Norm references / Approvals
UL File Nr. E79903
GGVS: TÜ.EGG.020-95

Product Make-up
Metric connection thread acc. to DIN EN 60423
Basis for technical information DIN IEC 62444

Note
SKINTOP® ST(R) M ISO types have an extra-long connection thread
SKINTOP® ST(R) M ISO versions with extra-long connection thread, see table, no DNV approval

Technical Data

Classification ETIM 5:	ETIM 5.0 Class-ID: EC000441 ETIM 5.0 Class-Description: Cable screw gland
Classification ETIM 6:	ETIM 6.0 Class-ID: EC000441 ETIM 6.0 Class-Description: Cable screw gland
Caution:	Refer to Appendix T21 for the installation dimensions and torques Size M 40 x 1,5 up tp M 63 x 1,5 with O-ring
Colour delivered:	Silver grey (RAL 7001) Light grey (RAL 7035) Black (RAL 9005), UV-resistant
Material:	Body: Polyamide Seal: CR
Tests:	GGVS: TÜ.EGG.020-95
Protection rating:	IP 66 IP 68 - 5 bar IP 69 NEMA Type 1, 12
Temperature range:	Fixed: -40°C to +100°C Dynamic: -20°C to +100°C

Note
Photographs and graphics are not to scale and do not represent detailed images of the respective products.
Prices are net prices without VAT and surcharges. Sale to business customers only.

Last Update (28.02.2022)
©2022 Lapp Group - Technical changes reserved
Product Management www.lappkabel.de
You can find the current technical data in the corresponding data sheet.
PN 0456 / 02_03.16

DOWNLOADED FROM SCATTS.CO.UK

DOWNLOADED FROM SCATTS.CO.UK

LAPP

SKINTOP® STR-M

PRODUCT INFORMATION

Article number	Article designation / size	Ø F mm	SW wrench size mm	Overall length C mm	Thread length D mm	Pieces / PU
SKINTOP® STR-M silver grey						
53111100	M 12 x 1,5	2 - 5	15	30.0	8	100
53111110	M 16 x 1,5	3.5 - 7	19	34.0	8	100
53111120	M 20 x 1,5	4 - 10	25	37.0	9	100
53111130	M 25 x 1,5	5 - 13	30	40.0	10	50
53111140	M 32 x 1,5	6 - 15	36	47.0	10	25
53111150	M 40 x 1,5	9 - 23	46	52.0	10	10
53111160	M 50 x 1,5	24 - 29	55	62.0	12	5
53111170	M 63 x 1,5	28 - 39	66	71.0	12	5
SKINTOP® STR-M black						
53111300	M 12 x 1,5	2 - 5	15	30.0	8	100
53111310	M 16 x 1,5	3.5 - 7	19	34.0	8	100
53111320	M 20 x 1,5	4 - 10	25	37.0	9	100
53111330	M 25 x 1,5	5 - 13	30	40.0	10	50
53111340	M 32 x 1,5	6 - 15	36	47.0	10	25
53111350	M 40 x 1,5	9 - 23	46	52.0	10	10
53111360	M 50 x 1,5	24 - 29	55	62.0	12	5
53111370	M 63 x 1,5	28 - 39	66	71.0	12	5
SKINTOP® STR-M light grey						
53111500	M 12 x 1,5	2 - 5	15	30.0	8	100
53111510	M 16 x 1,5	3.5 - 7	19	34.0	8	100
53111520	M 20 x 1,5	4 - 10	25	37.0	9	100
53111530	M 25 x 1,5	5 - 13	30	40.0	10	50
53111540	M 32 x 1,5	6 - 15	36	47.0	10	25
53111550	M 40 x 1,5	9 - 23	46	52.0	10	10
53111560	M 50 x 1,5	24 - 29	55	62.0	12	5
53111570	M 63 x 1,5	28 - 39	66	71.0	12	5
SKINTOP® STR M ISO silver-grey (with long metric connecting thread)						
53017110	M 16 x 1,5 ISO	2 - 6	19	40.0	12	100
53017130	M 20 x 1,5 ISO	4 - 9	24	45.0	13	100
53017140	M 25 x 1,5 ISO	6 - 12	27	47.0	13	50
SKINTOP® STR M ISO black (with long metric connecting thread)						
53017310	M 16 x 1,5 ISO	2 - 6	19	40.0	12	100
53017330	M 20 x 1,5 ISO	4 - 9	24	45.0	13	100
53017340	M 25 x 1,5 ISO	6 - 12	27	47.0	13	50

Last Update (28.02.2022)
©2022 Lapp Group - Technical changes reserved
Product Management www.lappkabel.de
You can find the current technical data in the corresponding data sheet.
PN 0456 / 02_03.16

DOWNLOADED FROM SCATTS.CO.UK

DOWNLOADED FROM SCATTS.CO.UK

SKINTOP® STR-M

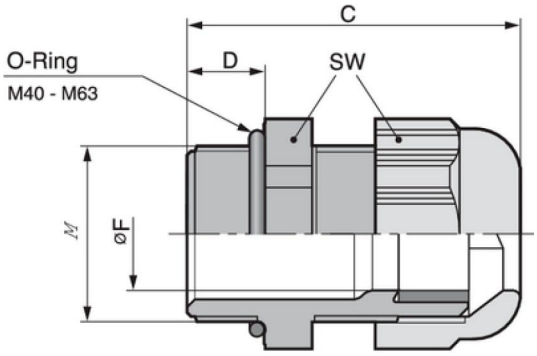

Last Update (28.02.2022)
©2022 Lapp Group - Technical changes reserved
Product Management www.lappkabel.de
You can find the current technical data in the corresponding data sheet.
PN 0456 / 02_03.16

DOWNLOADED FROM SCATTS.CO.UK

SCATTERGOOD & JOHNSON LTD
ELECTRICAL ENGINEERING & FLUID CONTROL DISTRIBUTORS
Est.1899

At Scattergood & Johnson Ltd, we pride ourselves on being a technical distributor to specialist industries.

Working with a range of quality product manufacturers across a number of specialist markets, we are not your average 'box shifter' - we are your technical and supply chain partner.

We fully support every product we sell - for free! Our internal team and external sales engineers can answer any product or application question, no matter the complexity.

Backing up this technical ability is a range of 50,000+ products available from stock for nationwide next day delivery (same day if required!), or you can collect what you need from any of our trade counters around the UK.

Select your specialist interest below to learn more about how we can help.

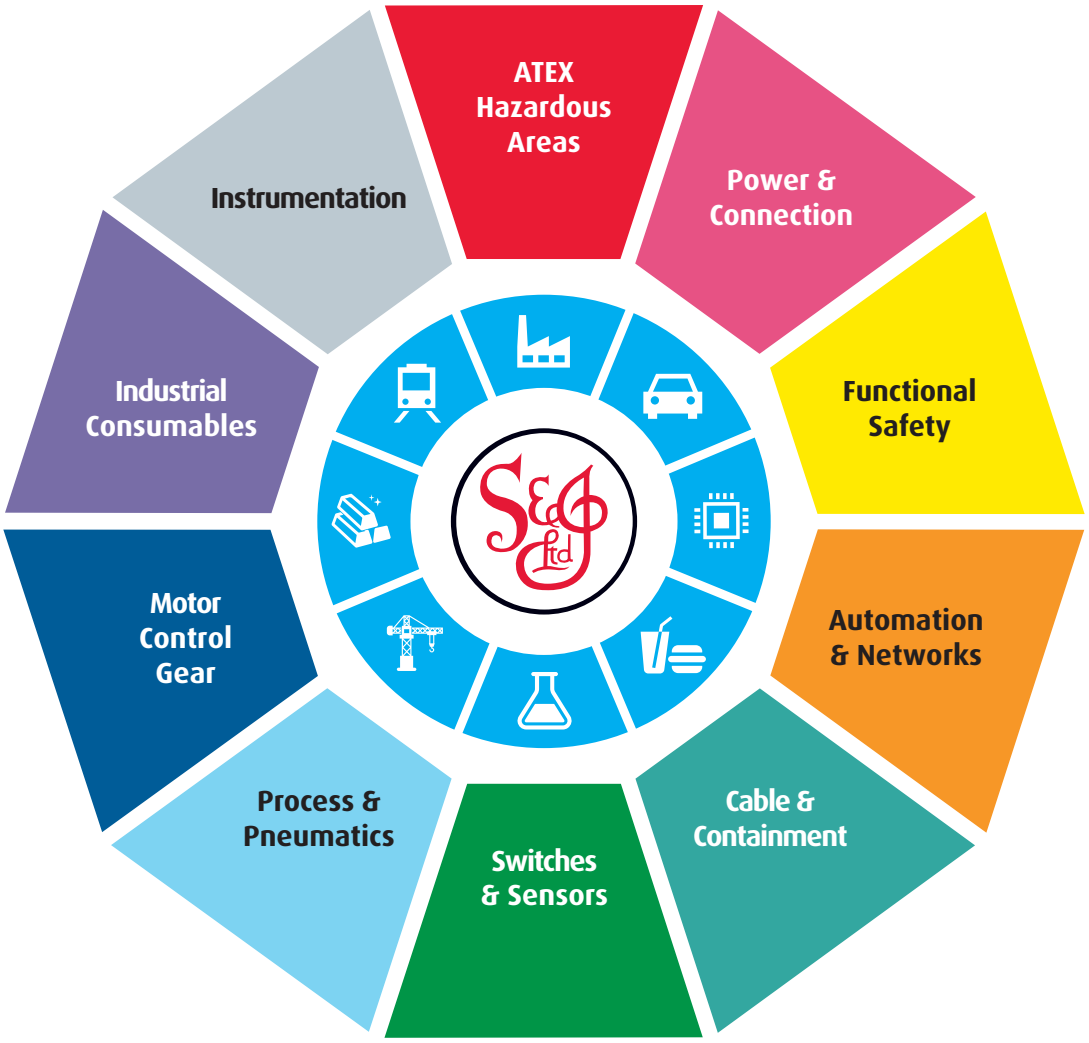

Online, In Branch and On the Road - Scattergood & Johnson Ltd, there when you need us.

www.scatts.co.uk