BFX3131

RIGID CONNECTING KIT FOR STAR-DELTA STARTERS, FOR CONTACTORS BF09...BF25 (LINE-STAR-DELTA)

Product designation		Rigid connecting kits for strar-delta starter. For BF09…BF25
Product type designation		BFX3131

Mechanical features

Weight	g	58

Dimensions [mm (in)]

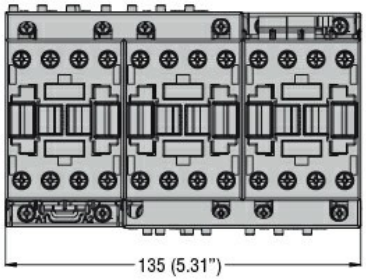

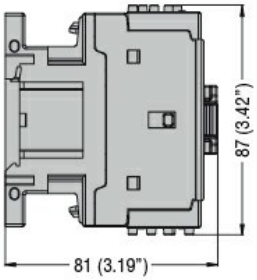

Wiring diagrams

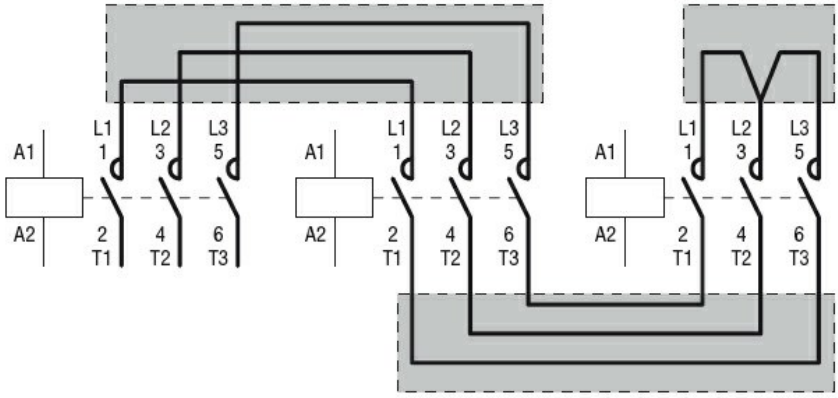

Certifications and compliance

Compliance	
	CSA C22.2 n° 60947-1
	IEC/EN 60947-1
	UL 60947-1
Certificates	
	cULus
	EAC

ETIM classification

ETIM 8.0	EC002498 - Accessories/spare parts for low-voltage switch technology

The characteristics described in this document are subject to updates or modifications at any time. The descriptions, technical and functional information, illustrations and instructions in this brochure are purely illustrative, and are consequently not contractually binding