BFX43

FOURTH POLE FOR BF40A...BF94A AND BF40E...BF94E

Dimensions [mm (in)]

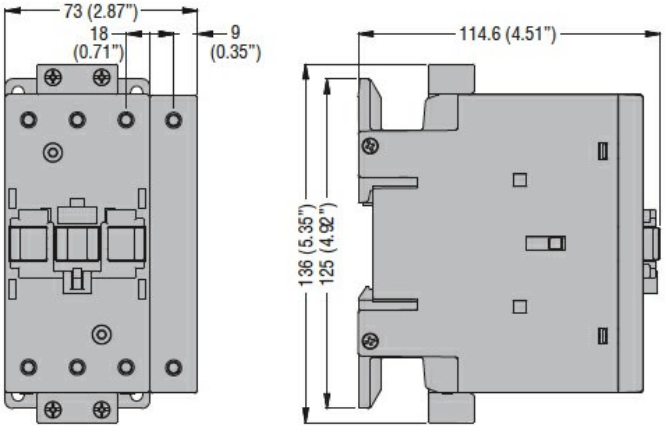

Certifications and compliance

Compliance	
	CSA C22.2 n° 60947-1
	CSA C22.2 n° 60947-4-1
	IEC/EN 60947-1
	IEC/EN 60947-4-1
	UL 60947-1
	UL 60947-4-1
Certificates	
	cULus

ETIM classification

ETIM 8.0	EC002498 - Accessories/spare parts for low-voltage switch technology

The characteristics described in this document are subject to updates or modifications at any time. The descriptions, technical and functional information, illustrations and instructions in this brochure are purely illustrative, and are consequently not contractually binding