BFX5002

MECHANICAL INTERLOCK, FRONT MOUNT, LOW PROFILE FOR BF00, BF09-BF38

Dimensions [mm (in)]

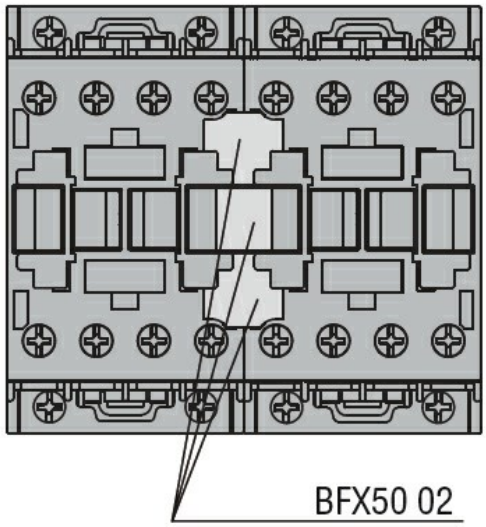

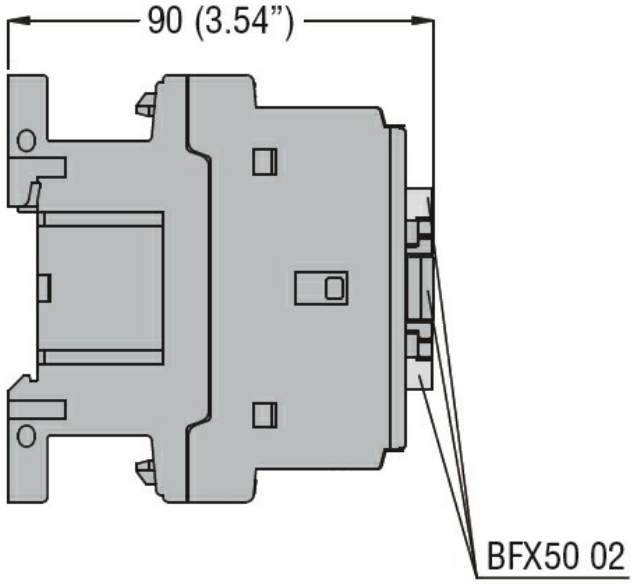

Certifications and compliance

Compliance	
	CSA C22.2 n° 60947-1
	CSA C22.2 n° 60947-4-1
	IEC/EN 60947-1
	IEC/EN 60947-4-1
	UL 60947-1
	UL 60947-4-1
Certificates	
	cULus
	EAC

ETIM classification

ETIM 8.0	EC001044 - Mechanic interlock for switch

The characteristics described in this document are subject to updates or modifications at any time. The descriptions, technical and functional information, illustrations and instructions in this brochure are purely illustrative, and are consequently not contractually binding